Consent Issued BC170037

WAIMAKARIRI
DISTRICT COUNCIL

AS BUILT TRUSS LAYOUT REQUIRED –
This must be received by the Building Unit
AT LEAST 10 WORKING DAYS PRIOR to the
Structure Pre-Roof Pre-Wrap Inspection

Truss "As-Built" Designs may be sent to:
buildinginfo@wmk.govt.nz

BC No: 170037

SITE DETAILS:

73 KIPPENBERGER AVENUE

PROPOSED LOT 40

LEGAL:

DP 476332

APPROVED BUILDING CONSENT DOCUMENTS AND PLANS

(FULL SET SUPPLIED)

- ON SITE COPY -

- These plans and specifications must be kept on site during construction, and made available to the building officer on request. Failure to do so will mean an automatic failure of the building inspection and will necessitate re-booking the inspection at the applicant's expense.
- All boundary survey pegs must be located and flagged by the owner before work is commenced.

INSPECTIONS

for bookings or building enquiries

please phone the BUILDING UNIT on:

03 311 8906

or

Email inspection bookings to: bcbooking@wmk.govt.nz

- Please refer to your inspection schedule for details of inspections to be carried out.
- 2-3 working day's notice should be given and provision made to allow access.
- The Code Compliance Certificate will be issued once the:
  - Final inspection has been carried out and passed
  - Audit of WDC building consent file has been completed
  - Payment of any outstanding invoices is received

Consent Issued BC170037

Dial Before You Dig

Safety near underground cables and services

MainPower is committed to providing a safe, secure and reliable electricity supply to all customers.

This fact sheet is designed to inform you about safety around electricity, particularly underground cables.

Working near electricity cables

Serious personal injury can result from damaging underground services during excavation and ground penetration. Supply disruption and repairs can be costly and extremely irritating to customers.

The positions where cables are buried are subject to reasonable tolerance however, the depth of cover may have changed since installation.

It is your responsibility to verify the position and depth of cables before excavation.

Steps to ensure safe digging

- Obtain up-to-date plans from the relevant local authorities.
- Use a cable locator, if possible, to mark-out the underground services before commencing work.
- Practice safe digging procedures.
- The Worksafe Guide for Safety with Underground Services sets out agreed work methods and preferred work practices for the location and excavation of underground services. Download the guide at - http://www.business.govt.nz/worksafe/information-guidance/all-guidance-items/underground-services-guide-for-safety-with/underground.pdf

Underground electricity cables

For copies of plans showing MainPower's electricity cables phone 03 311 8300, weekdays 8am - 5pm or email us at underground.records@mainpower.co.nz.

Please allow 2 working days to receive copies of plans. MainPower may hold some records of privately-owned cables connected to the MainPower network system; contact MainPower in the first instance.

Additional services MainPower can provide if you are planning your digging:

- Mark-out Services: MainPower can trace cables using an electronic locator.
- On-Site Supervision: For difficult work or locations, MainPower can provide on-site safety supervision.

Disclaimer This fact sheet is not an exhaustive list of all safety matters that need to be considered. Whilst care is taken in the preparation of this material, MainPower does not guarantee the accuracy and completeness of the information.

Underground council services

All contractors are reminded of their legal responsibility to take all practicable steps to locate and protect existing services. In the road corridor, service plans and a Corridor Access Request (CAR) permit need to be obtained through the Beforeudig website (www.beforeudig.co.nz). The Beforeudig service helps contractors to determine the location of any underground services before excavating. For service plans on private property, and lateral locations for work on private property that will not extend into any part of the road reserve, contact the Waimakariri District Council's Customer Services team at office@wmk.govt.nz.

Contact MainPower

To report a fault:
0508 60 70 80

For electricity emergencies:
0508 60 70 80

For general enquiries:
www.mainpower.co.nz
info@mainpower.co.nz
03 311 8300 (8am to 5pm, Monday to Friday)

mainpower

Dial before you dig.

Always remember to locate underground cables and services before digging and avoid serious injury, supply disruption and costly repairs. Phone MainPower for cable location advice.

03 311 8300

Think for Safety's Sake

www.mainpower.co.nz

Consent Issued BC170037

BC170037

DWELLING & OTHER WORKS - NOT COMMERCIAL

SECTION 1

Statutory Forms

- **Inspection List –** By Council
- **Building Consent Form (Form 5) –** By Council
- **Code Compliance Application (Form 6) –** By Council
- **Installation & PS3 Forms –** By Council
- **Application Form**
- **LBP Design Certificates**
- **Certificate of Title or Sales & Purchase Agreement**
- **PIM, Resource Consent –** By Council

Consent Issued BC170037

PLEASE NOTE

- Although your Consent documentation states 48 hours notice is required, it is not always possible to carry out an inspection within this period.
- If an inspection of the building works is not carried out in accordance with the Inspection Schedule it could affect the issue of the Code Compliance Certificate.

To book inspections ring WDC on
03 311 8906

All inspections are subject to a separate charge.

All re-inspections will be charged and recorded separately even if other inspections are carried out on the same day.

Using engineers & other professionals
If an engineer has been engaged to carry out various site inspections you will need to provide copies of his/her site notices to us and a producer statement, a PS4 from the engineer confirming the building elements designed and inspected by the engineer were completed in accordance with the approved design.

Confirmation of installation of products
We require producer statements, warranties & installation certificates from various installers as a way of confirming products have been installed in accordance with the manufacturer's recommendations. These are commonly required for exterior claddings, wet area tanking, membrane roofing/decking and effluent fields. Energy certificates such as electrical and gas certificates need to be provided too. You will need to provide these to us prior to the issue of the Code Compliance Certificate.

Applying for a Code Compliance Certificate (CCC)
When you are satisfied your project is complete please book a final inspection and complete and sign *form 6*, application for Code Compliance Certificate which is enclosed with your building consent. You should have this form ready for when the building Inspector arrives on site to carry out the final inspection. Please note all outstanding monies must be paid prior to the issue of the CCC.

Grant or refuse a CCC
We are required to make a decision to grant or refuse a CCC if you do not formally apply for a CCC within two years of the granting of the building consent. The date your consent was granted is the date at the bottom of the building consent form. If you do not apply for a CCC or arrange an extension with us within the two year period we may carry out an inspection of the building work. An additional fee applies for this work.

Lapsing of your consent
Your building consent will lapse if building work has not commenced within 12 months after the date of issue of the building consent. The issue date is deemed to be the day you paid for the consent. In saying this we understand things don't always run smoothly so you can apply for a time extension which we may agree to. A fee applies for this.

Consent Issued BC170037

Site Inspection Sheet

Application

Stonewood Homes (Christchurch) Franchisee Limited, PO Box 11036 Sockburn Christchurch 8443	No.	BC170037
	Issue date	17 March 2017
	Overseer	Peter Thomson

Project

Description	1100 New (& prebuilt) House, Unit, Bach, Crib, Town Houses BC - New or Relocated Dwelling, New Detached Dwelling, 01 Standard Building Consent(20 W Processing Days)
Intended Life	Indefinite (50+)
Intended Use	Residential
Estimated Value	$210845.46
Location	73 Kippenberger Avenue RANGIORA
Legal Description	LOT 500 DP 476332
Valuation No.	2165902368

This inspection list and all the approved plans relating to this building consent are to be kept on site and available to the building and/or plumbing and drainage inspector, or approved building certifier, on request.

Please give at least 48 hours notice for the next required inspection.

Work cannot proceed past each step until that step has been inspected and approved.

Please note! The approved plans and this inspection sheet are to be available on site, on request, at all times.

All inspections listed below are to be inspected by a WDC Building Inspector, an Engineer may also need to be engaged to inspect engineer requirements, this will be noted below.

Consent Issued BC170037

BC170037 *Main BC* Building Name: Location within Site: Level/Unit Number:
Foundation - Pre Pour - Engineer to Inspect; To verify the ground at the actual foundation locations is consistent with the ground conditions encountered as per the Riley Geotechnical report as dated 25th Nov 2016 (confirm 200KPa GUBC after trench excavation) with the engineers PS4 on completion
Compacted Hardfill - pre DPM -
Pre Pour Slab -
Structure Pre Roof Pre Wrap - To check the plywood sheet bracing fixings
Building Wrap & Sill Tape -
Mid Height Veneer - 70 series brick and the Linear w/b
Drains -
Preline & Plumbing -
Prestopping -
Final -

Consent Issued BC170037

WAIMAKARIRI DISTRICT COUNCIL

Form 5

Building consent BC170037

Section 51, Building Act 2004

The building

Street address of building: 73 Kippenberger Avenue RANGIORA

Legal description of land where building is located: LOT 500 DP 476332

Valuation number: 2165902368

Building name:

Location of building within site/block number:

Level/unit number: 1

The owner

Name of owner: Stonewood Homes (Christchurch) Franchisee Limited

Contact person:

Mailing address: PO Box 11036 Sockburn Christchurch 8443

Street address/registered office:

Phone number: Landline: Mobile: 0272550052

Daytime: After hours:

Facsimile number:

Email address: olivia.yee@stonewood.co.nz

Website:

First point of contact for communications with the council/building consent authority:
Stonewood Homes (Christchurch) Franchisee Limited

Building work

The following building work is authorised by this building consent:

DWELLING WITH ATTACHED GARAGE KIPPENBERGER AVENUE RANGIORA PROPOSED LOT 40 DP 155398 RC155398

New (& prebuilt) House, Unit, Bach, Crib, Town Houses

Housing - Detached dwellings

This building consent is issued under section 51 of the Building Act 2004. This building consent does not relieve the owner of the building (or proposed building) of any duty or responsibility under any other Act relating to or affecting the building (or proposed building).

This building consent also does not permit the construction, alteration, demolition, or removal of the building (or proposed building) if that construction, alteration, demolition, or removal would be in breach of any other Act.

Consent Issued BC170037

This building consent is subject to the following condition:

The Building Act 2004, s90, states that agents authorised by the building consent authority (the Council) for the purposes of this section are entitled, at all times during normal working hours or while building work is being done, to inspect –

(a) land on which building work is being or is proposed to be carried out; and
(b) building work that has been or is being carried out on or off the building site; and
(c) any building.

This building consent is issued with the following advice notes:

Please note that any material deviation from the approved documents will require a formal application for amendment. Amendments that are not of a material nature can be approved by a Building Officer or Building Inspector by way of the endorsement of the approved consent documentation.

The certifying drainlayer's registration number shall be provided to the Building Consent Authority prior to issue of the Code Compliance Certificate.

Comply with the endorsements on the plan.

The electrical certificate shall be provided to the building consent authority prior to issue of Code Compliance Certificate

The installer shall provide the building consent authority a PS3 for the installation of the fibre cement weatherboard cladding prior to issue of Code Compliance Certificate

Please note the consent has been granted prior to confirmation of who the Licensed Building Practitioners are for the job. The Building Consent Authority will not book nor carry out an inspection until the names and licence number(s) of the Licensed Building Practitioner(s) have been provided in writing.

The duplicate copy of the approved consent documents and inspection schedule must remain on site during construction.

The plumbing pressure test PS3 & plumbers registration number shall be provided to the Building Consent Authority prior to issue of the Code Compliance Certificate

A PS4 construction review will be required from the engineer prior to the issue of a Code Compliance Certificate.

Occupational Health and Safety and the Labour Department to be notified prior to any disturbance of asbestos or hazardous materials on site during demolition or construction.

Under Section 364 of the Building Act 2004, a residential property developer commits an offence if the residential property developer does either or both of the following things before a Code Compliance Certificate is issued in relation to a household unit: (a) completes a sale of the household unit. (b) allows a purchaser of the household unit to enter into possession of the household unit. Note: This does not apply if the residential property developer and the purchaser of the household unit enter into a written agreement, in the prescribed form, for one or both of the above items.

A Building Consent lapses and is of no effect if the building work to which it relates does not commence within 12 months after the date of issue of the building consent or any further period that the Building Consent Authority may allow. (Time extensions to commence building work after 12 months must be submitted to the Building Consent Authority in writing stating the reason for the request, prior to the lapse date of the consent.

A Building Consent is not completed until it has been issued with a Code Compliance Certificate. The owner is required to complete a separate application for a Code Compliance Certificate as soon as practicable after the building work is completed. In any event no later than two (2) years after the granting of the Building Consent. Council is required to decide whether or not a Code Compliance Certificate can be issued. If your project will not be completed within two years you will need to apply for a time extension*. *fees apply

All boundary survey pegs must be located by discovery or redefinition before work is commenced.

Consent Issued BC170037

Your consent is issued subject to manufactures technical information about their products, installation and maintenance is to be as this technical information requires.

Compliance schedule

A Compliance Schedule is not required for this building.

Attachments

Copies of the following documents are attached to this building consent:

Consented Plans

Consented Specifications

Inspection List

Form 6 Application for Code Compliance

Shirley Cresswell
Administrator
Building Unit

On behalf of: Waimakariri District Council
Date: 17 March 2017

Consent Issued BC170037

Form 6

Application for code compliance certificate

Section 92, Building Act 2004

The building consent

Building consent number: BC170037

Issued by: Waimakariri District Council

Valuation number: 2165902368

***The owner**

Name of owner: Stonewood Homes (Christchurch) Franchisee Limited

†Contact person:

Mailing address: PO Box 11036 Sockburn Christchurch 8443

Street address/registered office:

Phone number: Landline: Mobile: 0272550052

Daytime: After hours:

Facsimile number:

Email address: olivia.yee@stonewood.co.nz

Website:

The following evidence of ownership is attached to this application: RCNotReq

Application

All building work to be carried out under the above building consent was completed on:

The personnel who carried out the building work are as follows:

The following specified systems are contained on the compliance schedule for the building and, in the opinion of the personnel who installed them, are capable of performing to the performance standards set out in the building consent:

I request that you issue a code compliance certificate for this work under section 95 of the Building Act 2004.

The code compliance certificate should be sent to: PO Box 11036 Sockburn Christchurch 8443

_____

Signature of the owner

_____

Name of person signing

Date:

Consent Issued BC170037

Attachments

The following documents are attached to this application:

¶Certificates from the personnel who carried out the work

¶Certificates that relate to the energy work

¶Evidence that specified systems are capable of performing to the performance standards set out in the building consent

*Delete this section if details have not changed from the building consent.

†Delete if owner is an individual.

‖Contact details must be in New Zealand.

¶Delete items not applicable.

Consent Issued BC170037

WAIMAKARIRI
DISTRICT COUNCIL

PRODUCER STATEMENT PIPEWORK TESTING

Private Bag 1005, Rangiora 7440
Ph 03 311 8900, 03 327 6834 Fax 03 313 4432
www.waimakariri.govt.nz

BC No.

Issued by *(Plumber)*:

For *(Owner)*:

In respect of the testing of water pipe work prior to concealment.

At *(address)*:

I hereby state that I have personally tested the water pipe work installed in the building authorised under this Building Consent by the method indicated hereunder.

☐ By pressurising the pipe work to 1500 kPa for a period of not less than 15 minutes for the hot and cold water supply and checking to see there are no leaks. (NZBC G12/AS1 7.5.1 (a), (b).)

☐ By pressurising the uPVC pipe work to 1.5 times the maximum working pressure for a period of not less than 15 minutes and checking that there are no leaks. (NZBC G12/AS1 7.5.2, NZS 7643).

Max working pressure was:

☐ By pressurising the pipe work to 1500 kPa for a period of not less than 5 minutes and checking to see there are no leaks. (NZBC G12 VM1, AS3500:Part 1.2 1998)

And believe on reasonable grounds that the pipe work has passed that test.

☐ All work complies with the NZBC

I also understand that Waimakariri District Council in accepting this producer statement will be relying on it to issue the Code Compliance Certificate at the completion of the building work.

SIGNATURE OF LICENSED CERTIFYING PLUMBER:

Signature:

Date:

Registration Number:

Company Name:

Consent Issued BC170037

WAIMAKARIRI DISTRICT COUNCIL

Private Bag 1005, Rangiora 7440
Ph 03 311 8900, 03 327 6834 Fax 03 313 4432
waimakariri.govt.nz

BUILDING CONSENT AND/OR PIM APPLICATION

FOR DWELLINGS & OTHER WORK THAT DOES NOT FIT THE CRITERIA FOR SPECIFIED MINOR WORKS FIXED FEE

NOT FOR COMMERCIAL PROJECTS

Under The Building Act 2004, Sections 33, 45 & Schedule 1, Part 1, Section 2, BAA13

BC No. BC170037

THE BUILDING

1. Site address: KIPPENBERGER AVENUE RANGIORA PROPOSED LOT 40 RC155398
(Street / Road / Township)

2. Legal description of the land where the building is located:
Lot: 40 DP: 476332 Valuation Number: 2165900001

3. Building Name (if applicable):

4. Location of building within site:
(Only applicable to multi-development sites)

5. Number of levels: 1 6. Unit/Level No.:

7. Floor area m² - Existing: New: 169.38 Total: 169.38

8. Current lawfully established use:
(i.e. use on any previous consent for the existing building)

9. Year building first constructed: 2017
(Only applicable to existing buildings, approximate date is acceptable, eg 1920's)

THE OWNER

10. Owner's name: Stonewood Homes (CHCH) Franchisee Limited
(Company or organisation name if applicable)

11. Contact person: Olivia Yee

12. Mailing address: P O Box 11036 Sockburn, Christchurch

13. Street address / Registered office: 10 Logistics Drive, Harewood, Christchurch

14. Mobile: 027 255 0052 Landline: Email: olivia.yee@stonewood.co.nz

15. The following evidence of ownership is attached to this application:

☐ Copy of Certificate of Title OR ☐ Council to provide (additional charge of $10.20)
(Current within 1 month)

☑ Signed copy of Sale and Purchase Agreement
(If Certificate of Title is not issued)

THE AGENT

PLEASE NOTE - Authorisation is required from the owner to act as agent.

16. Agent's name: as per owners details
(Company or Organisation name if applicable)

17. Contact person: Olivia Yee

18. Mailing address:

19. Street address / Registered office:

20. Mobile: Landline: Email:

APPLICATION

21. **I request that the following (please select one) be issued for the Building Work described in this Application:**

- ☐ Project Information Memorandum (PIM) only
- ☐ Building Consent for PIM No:
- ☑ Building Consent with PIM
- ☐ Building Consent without PIM (Planning Check applies)
- ☐ Exemption from the need for B/C (Refer Schedule 1, Part 1, Section 2, BAA13)
- ☐ Amendment to Building Consent

22. **I wish to receive my approved documentation in the following format:**

PLEASE NOTE - If CD or Hard Copy please confirm if you wish to pick it up from the council or have it posted/couriered (couriered will incur an additional cost).

- ☑ Electronically via Sharefile Transfer Portal (1)
- ☐ CD: ☐ (post) OR ☐ (pick-up) OR ☐ (courier)
- ☐ Hard copy: ☐ (post) OR ☐ (pick-up) OR ☐ (courier)

23. **All consent related invoices/refunds to be billed and sent to:**

☐ Owner ☑ Agent ☐ Or other (If other please complete below)

Company name: Stonewood Homes (CHCH) Franchisee Limited
(If applicable)

Contact person: Olivia Yee

Mailing address: P O Box 11036, Sockburn, Christchurch

Mobile: 027 255 0052 Landline: Email: olivia.yee@stonewood.co.nz

PLEASE NOTE - Any refunds are to the receipted name unless written authorisation has been received from the receipted person or company.

24. **Please also provide:**

- ☐ Additional On-site copy
- ☐ Weather tight storage box(2)

(1) You must be set up and registered for this option.
(2) The council can supply a weather tight storage box for a cost (must be picked up from the Council).

PLEASE NOTE - One set of "On-site" hard copy consented documents must be available at all times for inspections.
If the applicant chooses to print their own "On-site" copy of documents it must be a full set, to scale and legible.
If there are non-consented documents on-site this will result in a failed inspection.

PROJECT

Consent Issued BC170037

25. Description of work (e.g. dwelling, alteration/addition)

Residential 3 bedroom dwelling with an attached garage

26. Specify the intended use of the building (e.g. residential)

27. Will the building work result in a change of use of this building? ☐ Yes ☑ No

If yes provide details

28. Will hazardous substances be stored in the building? ☐ Yes ☑ No

29. Intended life of the building:

Indefinite but not less than 50 years ☑ Or specified as years

30. Is this a staged consent: ☐ Yes ☐ No

If staged, provide details
(e.g. Stage 1 of 3)

31. List Building Consents previously issued for this building (if any):
(i.e. is this project being constructed in stages? Is this consent for a relocated or transportable building?)

32. Estimated value (incl GST) $ 210,845.46
(i.e. the estimated aggregate of the values of all goods and services to be supplied for the building work and includes GST).

GEOTECHNICAL REPORT

If a geotechnical report has been included in this application, please confirm that it has been uploaded to the Canterbury Geotechnical database by providing its unique report reference number below.

Report number:

PROJECT INFORMATION MEMORANDUM

The following matters are involved in the project:

- ☐ Subdivision
- ☑ Alterations to land contours
- ☐ New or altered connections to public utilities
- ☑ New or altered locations and/or external dimensions of buildings
- ☑ New or altered access for vehicles
- ☐ Building work over or adjacent to any road or public place
- ☐ Disposal of stormwater and wastewater
- ☐ Building work over any existing drains or sewers or in close proximity to wells or water mains
- ☐ Other matters known to the applicant that may require authorisations from the territorial authority:

NOTES

Consent Issued BC170037

Other notes or comments which you may wish to add, eg: Resource Consents

Consent Issued BC170037

BUILDING CODE COMPLIANCE

The building work will comply with the building code as follows:
(If you are not sure what clauses are applicable, consult with your builder, designer or architect).

Clause (Tick relevant clause numbers of Building Code)	**Means of compliance** (Refer to the relevant compliance document(s) or detail of alternative solution in the plans and specifications; if not applicable, put n/a	**Waiver / modification required** (State nature of waiver or modification of building code required; if not applicable, put n/a)
☑ B1 Structure	AS1	
☑ B2 Durability	AS1	
☑ C1 - C6 Protection from fire	AS1	
☑ D1 Access routes	AS1	
☐ D2 Mechanical installations for access		
☑ E1 Surface water	AS1	
☑ E2 External moisture	AS1	
☑ E3 Internal moisture	AS1	
☐ F1 Hazardous agents on site		
☑ F2 Hazardous building materials	AS1	
☐ F3 Hazardous substances and processes		
☐ F4 Safety from falling		
☑ F5 Construction and demolition hazards	AS1	
☐ F6 Visibility in escape routes		
☑ F7 Warning systems	AS1	
☐ F8 Signs		
☑ G1 Personal hygiene	AS1	
☑ G2 Laundering	AS1	
☑ G3 Food preparation and prevention of contamination	AS1	
☑ G4 Ventilation	AS1	
☐ G5 Interior environment		
☐ G6 Airborne and impact sound		
☑ G7 Natural light	AS1	
☑ G8 Artificial light	AS1	
☑ G9 Electricity	AS1	
☐ G10 Piped services		
☐ G11 Gas as an energy source		
☑ G12 Water supplies	AS1	
☑ G13 Foul water	AS1,AS2	
☐ G14 Industrial liquid waste		
☐ G15 Solid waste		
☑ H1 Energy efficiency	AS1	

Consent Issued BC170037

Building Consent Compliance Matrix

Clause		Means of Compliance	References	Waiver or Modification Required
B1	Structure			n/a
	Foundations	Alternative solution	2 x D16 to NZS 3604 Foundation	n/a
	Frames	AS1	NZS 3604, refer to Construction schedule for sizes (in specification)	n/a
	Trusses	Specfic Design (Producer Statement)	By Truss Manufacturer	n/a
B2	Durability	AS1	To NZS 3602, refer to Construction schedule in specification	n/a
C1-6	Fire	AS1		n/a
D1	Access	AS1	Refer to Floor Plan & Construction Schedule in the specification	n/a
D2	Mechanical Installations for Access	n/a		n/a
E1	Surface Water	AS1		n/a
E2	External Moisture	Alternative solution	Cladding Junctions, WANZ Bar to windows & door (over specificed size)	n/a
E3	Internal Moisture	AS1		n/a
F1	Hazadous Agents on Site	n/a		n/a
F2	Hazadous Building Materails	AS1		n/a
F3	Hazadous Substances and Process	n/a		n/a
F4	Saftey From Falling	AS1		n/a
F5	Construction and Demolition Hazzards	AS1		n/a
F6	Lighting for Emergency	n/a		n/a
F7	Warning Systems	AS1	Shown on the Floor Plan, also refer to Construction schedule in specification	n/a
F8	Signs	n/a		n/a
G1	Personal Hygiene	AS1		n/a
G2	Laundering	AS1	Refer to specific note in Construction Schedule at the front of the specification	n/a
G3	Food Prep & Prevention of Comtamination	AS1		n/a
G4	Ventilation	AS1		n/a
G5	Interior Enviroment	AS1		n/a
G6	Airborne and Impact Noise	n/a		n/a
G7	Natural Light	AS1		n/a
G8	Artifical Light	AS1	Note on floor plan refers to Electrical section In the specification	n/a
G9	Electricity	AS1	Note on floor plan refers to Electrical section In the specification	n/a
G10	Piped Services	AS1		n/a
G11	Gas as an Energy Service	AS1		n/a
G12	Water Supplies	AS1	Refer to Specification	n/a
G13	Foul Water	AS1 & AS2	Refer to Drainage plan & Drainage section in specification	n/a
G14	Industrial Liquid Waste	n/a		n/a
G15	Solid Waste	n/a		n/a
H1	Energy Efficiency	AS1	Note on Floor Plan refers to H1 Calculations attached to specification	n/a

Consent Issued BC170037

COMPLIANCE SCHEDULE

The specified systems for the building are as follows (specified systems are defined in regulations):

The following specified systems are being altered, added to, or removed in the course of the building work:

There are no specified systems in the building ☑

RESTRICTED BUILDING WORK

Does the building work include any restricted building work? ☑ Yes ☐ No

If Yes, provide the following details of all Licensed Building Practitioners who will be involved in carrying out or supervising the restricted building work (if these details are unknown at the time of the application, they must be supplied before the work begins).

LICENCE CLASS	NAME	LICENSED BUILDING PRACTITIONER NUMBER (or registration number if treated as being licensed under section 291 of the Building Act 2004)
FOUNDATIONS		
CARPENTRY		
EXTERIOR PLASTERER		
BRICKLAYER		
BLOCKLAYER		
ROOFER		

Consent Issued BC170037

Building Consent 170037
Received 16/2/17

KEY PERSONNEL

BUILDER

Name:		Reg. No.:	
Address:			
Phone No.:		Fax No.:	
Email:			

DESIGNER(S)

Name:	Jeremy Harrison	Reg. No.:	105491
Address:	12 Muffitt Street, Pegasus, 7612		
Phone No.:		Fax No.:	
Email:	harrisonjerm@gmail.com		

CERTIFYING DRAINLAYER

Name:		Reg. No.:	
Address:			
Phone No.:		Fax No.:	
Email:			

CERTIFYING PLUMBER

Name:		Reg. No.:	
Address:			
Phone No.:		Fax No.:	
Email:			

CERTIFYING GASFITTER

Name:		Reg. No.:	
Address:			
Phone No.:		Fax No.:	
Email:			

REGISTERED ELECTRICIAN

Name:		Reg. No.:	
Address:			
Phone No.:		Fax No.:	
Email:			

STRUCTURAL ENGINEER

Name:		Reg. No.:	
Address:			
Phone No.:		Fax No.:	
Email:			

Consent Issued BC170037

OWNER / AGENT AUTHORISATION

PLEASE NOTE - By entering your name in the box below you are giving your authority for the application to proceed.

Name: Olivia Yee Date: 17.1.2017

I am the ☐ Owner ☑ Agent

Note: If acting on behalf, by entering your name above you hereby declare that you are authorised to act as Agent for the Owner.

NB: Ensure Agent Authorisation section is completed - see below.

AGENT AUTHORISATION
(TO BE AUTHORISED BY OWNER)

PLEASE NOTE - By entering your name in the box below you are giving your authority for this application to proceed.

I authorise _____ to act as Agent on my behalf for this Building Consent application under Sections 33 and 45 of the Building Act 2004.

With respect to this Building Consent application, I authorise _____ to act as Agent on my behalf for the application for Code Compliance Certificate under Section 92 of the Building Act 2004.

Name (Owner): _____ Date: _____

TERMS OF TRADE

I/We understand that:

Building Consents shall be paid for when the consent is collected or if the consent is not collected within three months after the date of consent being granted, the work done to date portion i.e. admin and processing costs of the account will be due and payable. The balance of the invoice will be payable when the consent is collected.

All other accounts shall be paid by the 20th day of the month following the month in which the invoice is issued.

I/We agree to pay according to these terms for any goods or services you supply to us. Failure to meet these Terms of Trade may result in any credit arrangement being withdrawn with any balance becoming payable within seven days. Should failure to meet the terms of trade result in debt recovery and/or legal proceedings, any costs whatsoever incurred in the collection of the debt including debt collector's fees and commissions and legal costs, charges and expenses on a solicitor and own client basis will be added to the account and will be payable by me/us.

Consent Issued BC170037

DOCUMENTATION CHECKLIST

Applicants must mark all items provided with ☑ or leave blank if not applicable.

PIM

This section must be completed if you are applying for a PIM.
DO NOT complete this section if a PIM has already been issued.
The following documents are attached to this application:

- ✔ Site plan, Floor plans, Elevations for proposed building
- ✔ Certificate of Title, or Sales and Purchase Agreement if C/T is not issued. Current C/T required (issued within one month of application)
- ✔ One copy of all information required (all plans to be dimensioned, scaled and accurate. Plans preferred size A3)
- ☐ Application fee (as per Council Fees and Charges Schedule)

BUILDING CONSENT

(DO NOT complete this section if the Application is for a Project Information Memorandum only)
The following documents are attached to this application:

- ✔ 1 copy - building plans (site plans, floor plans, elevation plans. All plans to be dimensioned, scaled and accurate preferred size A3)
- ✔ 1 copy of each - specifications, producer statements, truss details (refer below)
- ✔ 1 copy -Certificate of Title or Sale and Purchase Agreement if C/T is not issued. Current C/T required (issued within one month of application)
- ☐ Project Information Memorandum Development Contribution Notice (if applicable)
- ☐ Certificate attached to Project Information Memorandum (Resource Management Act)
- ✔ Certificate of design work from licensed building practitioner
- ☐ Restricted building work - see page 5
- ☐ Key personnel - see page 6
- ☐ See page 4 for a schedule confirming the building work will comply with the Building Code

Building Consent 170037
Received 16/2/17

Consent Issued BC170037

OFFICE USE ONLY
These have been provided:

APPLICATION FORM (One copy)

- ✓ Fully complete all sections
- ✓ Means of Compliance with NZBC - designer to complete
- ☐ Provide the correct legal description (Council can help with this)
- ✓ Provide one copy of the current Certificate of Title, or Sales and Purchase Agreement - not more than one month old
- ✓ Give name and contact numbers of contact person (if not the owner)
- ✓ State the project location (street address or location details as near as possible if no address)
- ✓ Sign and date the form
- ✓ Agent Authorisation (section completed where applicable)
- ✓ Certificate/s of design work (LBP)

DESIGN BASIS (To be completed by the designer)

Please list the following basis for the building design:

✓ Wind zone	A HIGH
✓ Earthquake zone	2
✓ Snow zone/altitude	As per Truss Design
☐ Corrosion zone (if applicable)	

- ☐ Building is specifically engineer-designed
- ☐ Complies with NZS 3604:2011
- ☐ Both specific design and NZS 3604:2011

DESIGN DOCUMENTS (One copy)

- ✓ Weather tightness risk matrix
- ✓ Truss design layout and Producer Statement
- ✓ Bracing calculations / plan
- ✓ H1 Energy efficiency calculations

SITE PLAN (One copy)

- ✓ Overview of site showing legal boundaries as per current Title
- ☐ Showing proposed and existing structures (including swimming pools)
- ✓ Distances to boundaries
- ✓ Proposed and existing site levels
- ✓ North point
- ✓ Utility infrastructure (sewer, water pipelines, septic tanks etc) where applicable
- ✓ Water races, drains, topographic features

DRAINAGE LAYOUT (One copy to scale usually 1:100 or 1:50)

- ✓ Foul water - showing waste pipes, sizes, grades, venting
- ✓ Foul water to discharge point
- ✓ Storm water - pipe sizes, grades, downpipe locations
- ✓ Storm water drain to discharge point

FOUNDATION LAYOUT (One copy to scale usually 1:100 or 1:50)

- ✓ Full foundation layout plan
- ☐ For timber floors, show all pile layout, pile types and bracing location
- ✓ Slab thickenings, shrinkage control joints and reinforcing rebates

Consent Issued BC170037

BC170037

OFFICE USE ONLY
These have been provided:

FLOOR PLANS (**One copy** to scale usually 1:100 or 1:50)

- ✔ Layout of all floors fully dimensioned. For alterations and/or additions provide both new and existing floor plans
- ✔ Doors and window positions and sizes
- ✔ Layout of amenity areas (laundry etc)
- ✔ Main structural beams that are not shown elsewhere
- ✔ Lintel sizes
- ✔ HWC location
- ✔ Roof space access
- ☐ Gas cylinder location
- ✔ Room names
- ✔ Location of smoke alarms
- ✔ Location of heating unit (if applicable)

EXTERIOR ELEVATIONS (**One copy** to scale usually 1:100 or 1:50)

- ✔ Elevations of all external walls showing claddings
- ✔ Doors and windows showing opening sections
- ☐ Show location of solar panels
- ✔ Accurate ground levels existing and proposed
- ✔ Subfloor ventilation for timber floors
- ✔ Show roof bracing on elevations if not shown elsewhere

CROSS SECTION AND CONSTRUCTION DETAILS (**One copy** to scale usually 1:50 or 1:20 for sections and 1:10 for details - minimum scale)

- ✔ Roof lines, overhangs, floor levels, ground levels
- ✔ Major vertical dimensions
- ✔ Foundation, wall and roof structure materials
- ☐ Upper level decks or balconies over lower level room must be fully detailed including the stormwater disposal and overflow precautions
- ☐ Stairs, handrails and balustrade showing pitch and head clearances
- ✔ Structural connections, posts to footings, beams to posts, trusses or beams to walls
- ✔ Component fixing information is to be provided for all structural and framing components
- ✔ Foundation and footing details and reinforcing. Show height from finished floor to ground level
- ☐ Pile details for timber floors
- ✔ Floor bracing details
- ✔ Timber grade and treatment
- ✔ Damp proof membranes, building papers and insulation systems/materials
- ✔ Flashing details and documents
- ✔ Roof penetrations
- ✔ Shower floor details and wall to shower base junction detail
- ✔ Sealing to wet area fixtures
- ✔ Water splash prevention
- ✔ All other building components that are not otherwise detailed or are unusual in any way

SPECIFICATION (**One copy**)

The specification must be for the project. We will not accept standard specifications unless they relate directly to the building and they cover the project accurately and fully. Multichoice specifications will not be accepted. A brief accurate specification is usually best.

- ✔ Provide a written specification to cover all of the trades involved in the project. All materials used in the project are fully specified including fixings of all materials and components
- ✔ The specification can be written on the drawings as long as all materials are fully covered

Consent Issued BC170037

BC170037

IMPORTANT THINGS TO INCLUDE IN YOUR APPLICATION (One copy - where relevent)

OFFICE USE ONLY
These have been provided:

- [x] The chartered professional engineer's Producer Statement
- [x] The engineer's monitoring schedule if the engineer chooses to do site monitoring
- [x] All structural calculations
- [x] Structural details showing connections and details of the components
- [ ] Solar technical details and plumbing schematic
- [ ] Log fire and flue installation instructions. ☐
- [ ] If log fire secondhand, engineer's certification required
- [ ] Current potable water test (current within 18 months)
- [ ] Effluent disposal design & ECAN's copy of the submitted application form or approval
- [ ] Wastewater system designs when required to be done by a chartered professional engineer such as in a hazard zone

GEOTECHNICAL REPORT

- [ ] Unique report reference number provided, if applicable ☐

OFFICE USE ONLY

Further information required? ☐ Yes ☐ No

Date of acceptance: 19/01/2016 Officer: Cathy Thornton

OFFICE USE ONLY

Fee paid on application: $ 1635.00 Date: Officer:

Date payment processed: 24/01/2017 Receipt DC Officer: Shirley Cresswell

Consent Issued BC170037

IMPORTANT INFORMATION

All the relevant information on this form is required to be provided under the Building Act 2004 and/or Resource Management Act 1991 for the Waimakariri District Council to assess your application. Under these Acts this information has to be made available to members of the public if requested. The information contained in this application may be made available to other units of the Council. You have the right to access the personal information held about you by the Council which can be readily retrieved. You can also request that the Council correct any personal information it holds about you.

APPLICATION INFORMATION

(a) Project Information Memorandum (PIM):
A PIM will be issued within 20 working days provided all the required information is supplied with the application.

Processing time is stopped whenever further information is required and starts again when the correct information is received. It is not mandatory to apply for a PIM. Applicants can choose not to apply for a PIM when they consider that the information would not be relevant for their building project.

A fee is required to accompany your PIM application (as per Council's fees and Charges Schedule).

(b) Planning Check:
Where a PIM is not sought, a Planning Check will be undertaken to ensure your proposal complies with the District Plan.

(c) Building Consent (BC):
A Building Consent will be processed within a maximum allowable time of 20 working days provided all the information required has been supplied. Processing time is stopped whenever further information is required and starts again when the correct information is received.

Once the Building Consent has been granted, you will receive notification, which will include an invoice for the fees payable.

Once the fees are paid in full, your Building Consent will be issued. Work must not start until the Building Consent is issued, and any Resource Consent requirements have been resolved.

A Building Consent lapses and is of no effect if the building work to which it relates does not commence within 12 months after the date of issue of the Building Consent or any further period that the Building Consent Authority may allow.

(d) Combined Project Information Memorandum & Building Consent Applications:
Applications for a combined PIM/BC will only be accepted when sufficient information is provided to permit the Building Consent to be processed.

If insufficient information is provided, then further information will be requested, or your application may be returned to you.

(e) If the applicant does not own the land, they must provide written approval from the owner to submit this application.

LEVIES PAYABLE

Council are required to collect levies for the MBIE and BRANZ. No levy shall be payable if the value of that work is less than $20,000. If your project is valued at $20,000 or more, the fixed fee will increase by the value of the MBIE and BRANZ levies.

INSPECTIONS

During the process of construction, inspections will be necessary to confirm all work complies with your approved Building Consent documentation. Please phone the Council Building Unit on 03 311 8906 at least 48 hours in advance of requiring an inspection to ensure that this can be arranged.

The inspections required will be set out in the Building Consent documentation issued by the Council. Failure to have a prescribed inspection carried out may put the issue of the Code Compliance Certificate at risk.

Failed inspections will incur a re-inspection charge.

RESOURCE CONSENT

Your application will be assessed by the Planning Unit of the Council to determine whether your project complies with the relevant District Plan requirements.

If your application does not comply with District Plan requirements you will need to either amend your proposal to comply or apply for a Resource Consent. A Certificate will be attached to your Project Information Memorandum to notify that a Resource Consent is required prior to building work commencing. It is recommended that you phone the Planning Unit on 03 311 8900 to discuss the process.

CODE COMPLIANCE CERTIFICATE

A Building Consent is not completed until it has been issued with a Code Compliance Certificate. The owner is required to complete a separate application for a Code Compliance Certificate as soon as practicable after the building work is completed. In any event no later than two (2) years after the granting of the Building Consent, Council is required to decide whether or not a Code Compliance Certificate can be issued. If your project will not be completed within two years you will need to apply for a time extension*.
*Fees apply

AGENCY

The owner may authorise an agent to submit an application on their behalf.

The Agent will be the first point of contact for all communications with the Council/Building Consent Authority regarding this application under Sections 33 and 45 and if authorised, the application for a Code Compliance Certificate under Section 92 of the Building Act 2004. They will receive all correspondence and must be authorised by the Owner - see page 7. All amendments require new authorisation.

BC170037

Consent issued BC170037

AGREEMENT FOR SALE AND PURCHASE OF REAL ESTATE

This form is approved by the Real Estate Institute of New Zealand Incorporated and by Auckland District Law Society Incorporated.

DATE:

VENDOR: Freeman Homes Limited

PURCHASER: Stonewood Homes (CHCH) Franchisee Ltd. **and/or nominee**

The vendor is registered under the GST Act in respect of the transaction evidenced by this agreement and/or will be so registered at settlement: Yes/~~No~~

PROPERTY

Address: **Lot** 40 **, Elm Green Subdivision, Rangiora**

Estate: **FEE SIMPLE** ~~**LEASEHOLD**~~ ~~**STRATUM IN FREEHOLD**~~ ~~**STRATUM IN LEASEHOLD**~~ ~~**CROSSLEASE(FEE SIMPLE)**~~ ~~**CROSSLEASE(LEASEHOLD)**~~ (fee simple if none is deleted)

Legal Description:

Area (more or less):	Lot/Flat/Unit:	DP:	Unique Identifier or CT:
640 m2	Lot 40 being part of Stage 2 of proposed subdivision of Lot 500 DP476332, CT 657799	and Lot 1 DP25796 BLK VII Rangiora SD, CT CB7D/629 - plan attached.	

PAYMENT OF PURCHASE PRICE

Purchase price: $ ~~175,000~~ $155,650

Plus GST (if any) OR ~~**Inclusive of GST** (if any)~~ MJ

If neither is deleted, the purchase price includes GST (if any).

GST date (refer clause 14.0):

Deposit (refer clause 2.0): 10% of purchase price payable to the vendors solicitors trust account on confirmation of further terms of sale 28.3. (Meares Williams Trust Account ANZ 01 0797 0022986 000)

Balance of purchase price to be paid or satisfied as follows:

(1) By payment in cleared funds on the settlement date which is defined in clause 16.1

OR

~~(2) In the manner described in the Further Terms of Sale.~~

Interest rate for late settlement: 16% p.a.

CONDITIONS (refer clause 10.0)

Finance Condition

Lender:

Amount required:

Finance date:

LIM required: (refer clause 10.2) Yes/No

Building report required: (refer clause 10.3) Yes/No

OIA Consent required: (refer clause 10.4) Yes/No

Land Act/OIA date:

~~TENANCIES~~ ~~(if any)~~

~~**Name of tenant:**~~

~~**Bond: $**~~ ~~**Rent: $**~~ ~~**Term:**~~ ~~**Right of renewal:**~~

SALE BY:

Harcourts

Twiss & Keir Realty Limited -
a Member of the Harcourts Group
15 Good Street
RANGIORA 7400
Manager: John Tucker
Salesperson: Gary McNicholl (027 438 4279)

Phone: **03 313 6158**
Fax: **03 313 4788**
Email: **rangiora@harcourts.co.nz**
ID: AE13CC80-85E8-4586-89BA-3DB3D9BB223A

Licensed Real Estate Agent under Real Estate Agents Act 2008

It is agreed that the vendor sells and the purchaser purchases the property, and the chattels listed in Schedule 1, on the terms set out above and in the General Terms of Sale and any Further Terms of Sale.

BC170037

GENERAL TERMS OF SALE

Consent Issued BC170037

1.0 Definitions, time for performance, notices, and interpretation

1.1 Definitions

(1) Unless the context requires a different interpretation, words and phrases not otherwise defined have the same meanings ascribed to those words and phrases in the Goods and Services Tax Act 1985, the Property Law Act 2007, the Resource Management Act 1991 or the Unit Titles Act 2010.
(2) "Agreement" means this document including the front page, these General Terms of Sale, any Further Terms of Sale, and any schedules and attachments.
(3) "Building Act" means the Building Act 1991 and/or the Building Act 2004.
(4) "Building warrant of fitness" means a building warrant of fitness supplied to a territorial authority under the Building Act.
(5) "Cleared funds" means:
  (a) An electronic transfer of funds that has been made strictly in accordance with the requirements set out in the PLS Guidelines; or
  (b) A bank cheque, but only in the circumstances permitted by the PLS Guidelines and only if it has been paid strictly in accordance with the requirements set out in the PLS Guidelines.
(6) "Default GST" means any additional GST, penalty (civil or otherwise), interest, or other sum imposed on the vendor (or where the vendor is or was a member of a GST group its representative member) under the GST Act or the Tax Administration Act 1994 by reason of non-payment of any GST payable in respect of the supply made under this agreement but does not include any such sum levied against the vendor (or where the vendor is or was a member of a GST group its representative member) by reason of a default or delay by the vendor after payment of the GST to the vendor by the purchaser.
(7) "Electronic instrument" has the same meaning as ascribed to that term in the Land Transfer (Computer Registers and Electronic Lodgement) Amendment Act 2002.
(8) "GST" means Goods and Services Tax arising pursuant to the Goods and Services Tax Act 1985 and "GST Act" means the Goods and Services Tax Act 1985.
(9) "Landonline Workspace" means an electronic workspace facility approved by the Registrar-General of Land pursuant to the provisions of the Land Transfer (Computer Registers and Electronic Lodgement) Amendment Act 2002.
(10) "LIM" means a land information memorandum issued pursuant to the Local Government Official Information and Meetings Act 1987.
(11) "LINZ" means Land Information New Zealand.
(12) "Local authority" means a territorial authority or a regional council.
(13) "OIA Consent" means consent to purchase the property under the Overseas Investment Act 2005.
(14) "PLS Guidelines" means the most recent edition, as at the date of this agreement, of the Property Transactions and E-Dealing Practice Guidelines prepared by the Property Law Section of the New Zealand Law Society.
(15) "Property" means the property described in this agreement.
(16) "Purchase price" means the total purchase price stated in this agreement which the purchaser has agreed to pay the vendor for the property and the chattels included in the sale.
(17) "Regional council" means a regional council within the meaning of the Local Government Act 2002.
(18) "Remote settlement" means settlement of the sale and purchase of the property by way of the purchaser's lawyer paying the moneys due and payable on the settlement date directly into the trust account of the vendor's lawyer, in consideration of the vendor agreeing to meet the vendor's obligations under subclause 3.8(2), pursuant to the protocol for remote settlement recommended in the PLS Guidelines.
(19) "Secure web document exchange" means an electronic messaging service enabling messages and electronic documents to be posted by one party to a secure website to be viewed by the other party immediately after posting.
(20) "Settlement date" means the date specified as such in this agreement.
(21) "Settlement statement" means a statement showing the purchase price, plus any GST payable by the purchaser in addition to the purchase price, less any deposit or other payments or allowances to be credited to the purchaser, together with apportionments of all incomings and outgoings apportioned at the settlement date.
(22) "Territorial authority" means a territorial authority within the meaning of the Local Government Act 2002.
(23) "Unit title" means a unit title under the Unit Titles Act 2010.
(24) The terms "principal unit", "accessory unit", "owner", "unit plan", and "unit" have the meanings ascribed to those terms in the Unit Titles Act 2010.
(25) The term "rules" includes both body corporate rules under the Unit Titles Act 1972 and body corporate operational rules under the Unit Titles Act 2010.
(26) The terms "building", "building consent", "code compliance certificate", "compliance schedule", "household unit", and "commercial on-seller" have the meanings ascribed to those terms in the Building Act.
(27) The term "title" includes where appropriate a computer register within the meaning of the Land Transfer (Computer Registers and Electronic Lodgement) Amendment Act 2002.
(28) The terms "going concern", "goods", "principal place of residence", "recipient", "registered person", "registration number", "supply", and "taxable activity" have the meanings ascribed to those terms in the GST Act.
(29) The terms "tax information" and "tax statement" have the meanings ascribed to those terms in the Land Transfer Act 1952.
(30) The terms "associated person", "conveyancer", "residential land purchase amount", "offshore RLWT person", "RLWT", "RLWT certificate of exemption" and "RLWT rules" have the meanings ascribed to those terms in the Income Tax Act 2007.
(31) The term "Commissioner" has the meaning ascribed to that term in the Tax Administration Act 1994.
(32) "Working day" means any day of the week other than:
  (a) Saturday, Sunday, Waitangi Day, Good Friday, Easter Monday, Anzac Day, the Sovereign's Birthday, and Labour Day;
  (b) if Waitangi Day or Anzac Day falls on a Saturday or Sunday, the following Monday;
  (c) a day in the period commencing on the 24th day of December in any year and ending on the 5th day of January (or in the case of subclause 10.2(2) the 15th day of January) in the following year, both days inclusive; and
  (d) the day observed as the anniversary of any province in which the property is situated.

  A working day shall be deemed to commence at 9.00 am and to terminate at 5.00 pm.
(33) Unless a contrary intention appears on the front page or elsewhere in this agreement:
  (a) the interest rate for late settlement is equivalent to the interest rate charged by the Inland Revenue Department on unpaid tax under the Tax Administration Act 1994 during the period for which the interest rate for late settlement is payable, plus 5% per annum; and
  (b) a party is in default if it did not do what it has contracted to do to enable settlement to occur, regardless of the cause of such failure.

1.2 Time for Performance

(1) Where the day nominated for settlement or the fulfilment of a condition is not a working day, then the settlement date or the date for fulfilment of the condition shall be the last working day before the day so nominated.
(2) Any act done pursuant to this agreement by a party, including service of notices, after 5.00 pm on a working day, or on a day that is not a working day, shall be deemed to have been done at 9.00 am on the next succeeding working day.
(3) Where two or more acts done pursuant to this agreement, including service of notices, are deemed to have been done at the same time, they shall take effect in the order in which they would have taken effect but for subclause 1.2(2).

1.3 Notices

The following apply to all notices between the parties relevant to this agreement, whether authorised by this agreement or by the general law:
(1) All notices must be served in writing.
(2) Any notice under section 28 of the Property Law Act 2007, where the purchaser is in possession of the property, must be served in accordance with section 353 of that Act.
(3) All other notices, unless otherwise required by the Property Law Act 2007, must be served by one of the following means:
  (a) on the party as authorised by sections 354 to 361 of the Property Law Act 2007, or
  (b) on the party or on the party's lawyer:
    (i) by personal delivery; or
    (ii) by posting by ordinary mail; or
    (iii) by facsimile; or
    (iv) by email; or
    (v) in the case of the party's lawyer only, by sending by document exchange or, if both parties' lawyers have agreed to subscribe to the same secure web document exchange for this agreement, by secure web document exchange.
(4) In respect of the means of service specified in subclause 1.3(3)(b), a notice is deemed to have been served:
  (a) in the case of personal delivery, when received by the party or at the lawyer's office;
  (b) in the case of posting by ordinary mail, on the third working day following the date of posting to the address for service notified in writing by the party or to the postal address of the lawyer's office;
  (c) in the case of facsimile transmission, when sent to the facsimile number notified in writing by the party or to the facsimile number of the lawyer's office;
  (d) in the case of email, when acknowledged by the party or by the lawyer orally or by return email or otherwise in writing, except that return emails generated automatically shall not constitute an acknowledgement;

Consent Issued BC170097
BC170097

(e) in the case of sending by document exchange, on the second working day following the date of sending to the document exchange number of the lawyer's office;
(f) in the case of sending by secure web document exchange, at the time when in the ordinary course of operation of that secure web document exchange, a notice posted by one party is accessible for viewing or downloading by the other party.
(5) Any period of notice required to be given under this agreement shall be computed by excluding the day of service.
(6) In accordance with section 20(1) of the Electronic Transactions Act 2002, the parties agree that any notice or document that must be given in writing by one party to the other may be given in electronic form and by means of an electronic communication, subject to the rules regarding service set out above.

1.4 Interpretation
(1) If there is more than one vendor or purchaser, the liability of the vendors or of the purchasers, as the case may be, is joint and several.
(2) Where the purchaser executes this agreement with provision for a nominee, or as agent for an undisclosed or disclosed but unidentified principal, or on behalf of a company to be formed, the purchaser shall at all times remain liable for all obligations on the part of the purchaser.
(3) If any inserted term (including any Further Terms of Sale) conflicts with the General Terms of Sale the inserted term shall prevail.
(4) Headings are for information only and do not form part of this agreement.
(5) References to statutory provisions shall be construed as references to those provisions as they may be amended or re-enacted or as their application is modified by other provisions from time to time.

2.0 Deposit

2.1 The purchaser shall pay the deposit to the vendor or the vendor's agent immediately upon execution of this agreement by both parties and/or at such other time as is specified in this agreement.

2.2 If the deposit is not paid on the due date for payment, the vendor may at any time thereafter serve on the purchaser notice requiring payment. If the purchaser fails to pay the deposit on or before the third working day after service of the notice, time being of the essence, the vendor may cancel this agreement by serving notice of cancellation on the purchaser. No notice of cancellation shall be effective if the deposit has been paid before the notice of cancellation is served.

2.3 The deposit shall be in part payment of the purchase price.

2.4 The person to whom the deposit is paid shall hold it as a stakeholder until:
~~(1) the requisition procedure under clause 6.0 is completed without either party cancelling this agreement; and~~
(2) where this agreement is entered into subject to any condition(s) expressed in this agreement, each such condition has been fulfilled or waived; and
(3) where the property is a unit title:
(a) a pre-settlement disclosure statement, certified correct by the body corporate, under section 147 of the Unit Titles Act 2010; and
(b) an additional disclosure statement under section 148 of the Unit Titles Act 2010 (if requested by the purchaser within the time prescribed in section 148(2)),
have been provided to the purchaser by the vendor within the times prescribed in those sections or otherwise the purchaser has given notice under section 149(2) of the Unit Titles Act 2010 to postpone the settlement date until after the disclosure statements have been provided; or
(4) this agreement is cancelled pursuant to subclause 6.2(3)(c) or avoided pursuant to subclause 10.8(5) or, where the property is a unit title and the purchaser having the right to cancel this agreement pursuant to section 151(2) of the Unit Titles Act 2010 has cancelled this agreement pursuant to that section, or has waived the right to cancel by giving notice to the vendor, or by completing settlement of the purchase.

3.0 Possession and Settlement

Possession

3.1 Unless particulars of a tenancy are included in this agreement, the property is sold with vacant possession and the vendor shall so yield the property on the settlement date.

3.2 If the property is sold with vacant possession, then subject to the rights of any tenants of the property, the vendor shall permit the purchaser or any person authorised by the purchaser in writing, upon reasonable notice:
(1) to enter the property on one occasion prior to the settlement date for the purposes of examining the property, chattels and fixtures which are included in the sale; and
(2) to re-enter the property on or before the settlement date to confirm compliance by the vendor with any agreement made by the vendor to carry out any work on the property and the chattels and the fixtures.

3.3 Possession shall be given and taken on the settlement date. Outgoings and incomings in respect of the settlement date are the responsibility of and belong to the vendor.

~~3.4 On the settlement date, the vendor shall make available to the purchaser keys to all exterior doors that are locked by key, electronic door openers to all doors that are opened electronically, and the keys and/or security codes to any alarms. The vendor does not have to make available keys, electronic door openers, and security codes where the property is tenanted and these are held by the tenant.~~

Settlement

3.5 The vendor shall prepare, at the vendor's own expense, a settlement statement. The vendor shall tender the settlement statement to the purchaser or the purchaser's lawyer a reasonable time prior to the settlement date.

3.6 The purchaser's lawyer shall:
(1) within a reasonable time prior to the settlement date create a Landonline Workspace for the transaction, notify the vendor's lawyer of the dealing number allocated by LINZ, and prepare in that workspace a transfer instrument in respect of the property; and
(2) prior to settlement:
(a) lodge in that workspace the tax information contained in the transferee's tax statement; and
(b) certify and sign the transfer instrument.

3.7 The vendor's lawyer shall:
(1) within a reasonable time prior to the settlement date prepare in that workspace all other electronic instruments required to confer title on the purchaser in terms of the vendor's obligations under this agreement; and
(2) prior to settlement:
(a) lodge in that workspace the tax information contained in the transferor's tax statement; and
(b) have those instruments and the transfer instrument certified, signed and, where possible, pre-validated.

3.8 On the settlement date:
(1) the balance of the purchase price, interest and other moneys, if any, shall be paid by the purchaser in cleared funds or otherwise satisfied as provided in this agreement (credit being given for any amount payable by the vendor under subclause 3.12 or 3.14);
(2) the vendor's lawyer shall immediately thereafter:
(a) release or procure the release of the transfer instrument and the other instruments mentioned in subclause 3.7(1) so that the purchaser's lawyer can then submit them for registration;
(b) pay to the purchaser's lawyer the LINZ registration fees on all of the instruments mentioned in subclause 3.7(1), unless these fees will be invoiced to the vendor's lawyer by LINZ directly; and
(c) deliver to the purchaser's lawyer any other documents that the vendor must provide to the purchaser on settlement in terms of this agreement.

3.9 All obligations under subclause 3.8 are interdependent.

3.10 The parties shall complete settlement by way of remote settlement, provided that where payment by bank cheque is permitted under the PLS Guidelines, payment may be made by the personal delivery of a bank cheque to the vendor's lawyer's office, so long as it is accompanied by the undertaking from the purchaser's lawyer required by those Guidelines.

Last Minute Settlement

3.11 If due to the delay of the purchaser, settlement takes place between 4.00 pm and 5.00 pm on the settlement date ("last minute settlement"), the purchaser shall pay the vendor:
(1) one day's interest at the interest rate for late settlement on the portion of the purchase price paid in the last minute settlement; and
(2) if the day following the last minute settlement is not a working day, an additional day's interest (calculated in the same manner) for each day until, but excluding, the next working day.

ab

Consent Issued BC170037
BC170037

Purchaser Default: Late Settlement

3.12 If any portion of the purchase price is not paid upon the due date for payment, then, provided that the vendor provides reasonable evidence of the vendor's ability to perform any obligation the vendor is obliged to perform on that date in consideration for such payment:

(1) the purchaser shall pay to the vendor interest at the interest rate for late settlement on the portion of the purchase price so unpaid for the period from the due date for payment until payment ("the default period"); but nevertheless, this stipulation is without prejudice to any of the vendor's rights or remedies including any right to claim for additional expenses and damages. For the purposes of this subclause, a payment made on a day other than a working day or after the termination of a working day shall be deemed to be made on the next following working day and interest shall be computed accordingly; and

(2) the vendor is not obliged to give the purchaser possession of the property or to ~~pay the purchaser any amount for remaining in possession, unless this agreement relates to a tenanted property, in which case the vendor must elect either to:~~

~~(a) account to the purchaser on settlement for incomings in respect of the property which are payable and received during the default period, in which event the purchaser shall be responsible for the outgoings relating to the property during the default period; or~~

~~(b) retain such incomings in lieu of receiving interest from the purchaser pursuant to subclause 3.12(1).~~

3.13 Where subclause 3.12(1) applies and the parties are unable to agree upon any amount claimed by the vendor for additional expenses and damages:

(1) an interim amount shall on settlement be paid to a stakeholder by the purchaser until the amount payable is determined;

(2) the interim amount must be a reasonable sum having regard to all of the circumstances;

(3) if the parties cannot agree on the interim amount, the interim amount shall be determined by an experienced property lawyer appointed by the parties. The appointee's costs shall be met equally by the parties. If the parties cannot agree on the appointee, the appointment shall be made on the application of either party by the president for the time being of the New Zealand Law Society;

(4) the stakeholder shall lodge the interim amount on interest-bearing call deposit with a bank registered under the Reserve Bank of New Zealand Act 1989 in the joint names of the vendor and the purchaser;

(5) the interest earned on the interim amount net of any withholding tax and any bank or legal administration fees and commission charges shall follow the destination of the interim amount;

(6) the amount determined to be payable shall not be limited by the interim amount; and

(7) if the parties cannot agree on a stakeholder, the interim amount shall be paid to a stakeholder nominated on the application of either party by the president for the time being of the New Zealand Law Society.

Vendor Default: Late Settlement or Failure to Give Possession

3.14 (1) For the purposes of this subclause 3.14:

(a) the default period means:

(i) in subclause 3.14(2), the period from the settlement date until the date when the vendor is able and willing to provide vacant possession and the purchaser takes possession; and

(ii) in subclause 3.14(3), the period from the date the purchaser takes possession until the date when settlement occurs; and

(iii) in subclause 3.14(5), the period from the settlement date until the date when settlement occurs; and

(b) the vendor shall be deemed to be unwilling to give possession if the vendor does not offer to give possession.

(2) If this agreement provides for vacant possession but the vendor is unable or unwilling to give vacant possession on the settlement date, then, provided that the purchaser provides reasonable evidence of the purchaser's ability to perform the purchaser's obligations under this agreement:

(a) the vendor shall pay the purchaser, at the purchaser's election, either:

~~(i) compensation for any reasonable costs incurred for temporary accommodation for persons and storage of chattels during the default period; or~~

(ii) an amount equivalent to interest at the interest rate for late settlement on the entire purchase price during the default period; and

(b) the purchaser shall pay the vendor an amount equivalent to the interest earned or which would be earned on overnight deposits lodged in the purchaser's lawyer's trust bank account on such portion of the purchase price (including any deposit) as is payable under this agreement on or by the settlement date but remains unpaid during the default period less:

(i) any withholding tax; and

(ii) any bank or legal administration fees and commission charges; and

(iii) any interest payable by the purchaser to the purchaser's lender during the default period in respect of any mortgage or loan taken out by the purchaser in relation to the purchase of the property.

(3) If this agreement provides for vacant possession and the vendor is able and willing to give vacant possession on the settlement date, then, provided the purchaser provides reasonable evidence of the purchaser's ability to perform the purchaser's obligations under this agreement, the purchaser may elect to take possession in which case the vendor shall not be liable to pay any interest or other moneys to the purchaser but the purchaser shall pay the vendor the same amount as that specified in subclause 3.14(2)(b) during the default period. A purchaser in possession under this subclause 3.14(3) is a licensee only.

(4) Notwithstanding the provisions of subclause 3.14(3), the purchaser may elect not to take possession when the purchaser is entitled to take it. If the purchaser elects not to take possession, the provisions of subclause 3.14(2) shall apply as though the vendor were unable or unwilling to give vacant possession on the settlement date.

(5) If this agreement provides for the property to be sold tenanted then, provided that the purchaser provides reasonable evidence of the purchaser's ability to perform the purchaser's obligations under this agreement, the vendor shall on settlement account to the purchaser for incomings which are payable and received in respect of the property during the default period less the outgoings paid by the vendor during that period. Apart from accounting for such incomings, the vendor shall not be liable to pay any other moneys to the purchaser but the purchaser shall pay the vendor the same amount as that specified in subclause 3.14(2)(b) during the default period.

(6) The provisions of this subclause 3.14 shall be without prejudice to any of the purchaser's rights or remedies including any right to claim for any additional expenses and damages suffered by the purchaser.

(7) Where the parties are unable to agree upon any amount payable under this subclause 3.14:

(a) an interim amount shall on settlement be paid to a stakeholder by the party against whom it is claimed until the amount payable is determined;

(b) the interim amount shall be the lower of:

(i) the amount claimed; or

(ii) an amount equivalent to interest at the interest rate for late settlement for the relevant default period on such portion of the purchase price (including any deposit) as is payable under this agreement on or by the settlement date.

(c) the stakeholder shall lodge the interim amount on interest-bearing call deposit with a bank registered under the Reserve Bank of New Zealand Act 1989 in the joint names of the vendor and the purchaser;

(d) the interest earned on the interim amount net of any withholding tax and any bank or legal administration fees and commission charges shall follow the destination of the interim amount;

(e) the amount determined to be payable shall not be limited by the interim amount; and

(f) if the parties cannot agree on a stakeholder the interim amount shall be paid to a stakeholder nominated on the application of either party by the president for the time being of the New Zealand Law Society.

Deferment of Settlement and Possession

~~3.15 If~~

~~(1) this is an agreement for the sale by a commercial on-seller of a household unit; and~~

~~(2) a code compliance certificate has not been issued by the settlement date in relation to the household unit,~~

~~then, unless the parties agree otherwise (in which case the parties shall enter into a written agreement in the form (if any) prescribed by the Building (Forms) Regulations 2004), the settlement date shall be deferred to the fifth working day following the date upon which the vendor has given the purchaser notice that the code compliance certificate has been issued (which notice must be accompanied by a copy of the certificate).~~

3.16 In every case, if neither party is ready, willing, and able to settle on the settlement date, the settlement date shall be deferred to the third working day following the date upon which one of the parties gives notice it has become ready, willing, and able to settle.

3.17 If

(1) the property is a unit title;

(2) the settlement date is deferred pursuant to either subclause 3.15 or subclause 3.16; and

(3) the vendor considers on reasonable grounds that an extension of time is necessary or desirable in order for the vendor to comply with the warranty by the vendor in subclause 9.2(3),

(4) then the vendor may extend the settlement date:

(a) where there is a deferment of the settlement date pursuant to subclause 3.15, to the tenth working day following the date upon which the vendor gives the purchaser notice that the code compliance certificate has been issued, provided the vendor gives notice of the extension to the purchaser no later than the second working day after such notice; or

(b) where there is a deferment of the settlement date pursuant to subclause 3.16, to the tenth working day following the date upon which one of the parties gives notice that it has become ready, willing, and able to settle, provided the vendor gives notice of the extension to the purchaser no later than the second working day after such notice.

Consent Issued BC170037

BC170037

3.18 (1) Where
(a) the transfer of the property is to be registered against a new title yet to be issued; and
(b) a search copy, as defined in section 172A of the Land Transfer Act 1952, of that title is not obtainable by the tenth working day prior to the settlement date,
(c) then, unless the purchaser elects that settlement shall still take place on the agreed settlement date, the settlement date shall be deferred to the tenth working day following the later of the date on which:
(i) the vendor has given the purchaser notice that a search copy is obtainable; or
(ii) the requisitions procedure under clause 6.0 is complete.
(2) Subclause 3.18(1) shall not apply where it is necessary to register the transfer of the property to enable a plan to deposit and title to the property to issue.

4.0 Residential Land Withholding Tax

4.1 If the vendor does not have a conveyancer or the vendor and the purchaser are associated persons, then:
(1) the vendor must provide the purchaser or the purchaser's conveyancer, on or before the second working day before the due date for payment of the first residential land purchase amount payable under this agreement, with:
(a) sufficient information to enable the purchaser or the purchaser's conveyancer to determine to their reasonable satisfaction whether section 54C of the Tax Administration Act 1994 applies to the sale of the property; and
(b) if the purchaser or the purchaser's conveyancer determines to their reasonable satisfaction that section 54C of the Tax Administration Act 1994 does apply, all of the information required by that section and either an RLWT certificate of exemption in respect of the sale or otherwise such other information that the purchaser or the purchaser's conveyancer may reasonably require to enable the purchaser or the purchaser's conveyancer to determine to their reasonable satisfaction the amount of RLWT that must be withheld from each residential land purchase amount;
(2) the vendor shall be liable to pay any costs reasonably incurred by the purchaser or the purchaser's conveyancer in relation to RLWT, including the cost of obtaining professional advice in determining whether there is a requirement to withhold RLWT and the amount of RLWT that must be withheld, if any; and
(3) any payments payable by the purchaser on account of the purchase price shall be deemed to have been paid to the extent that:
(a) RLWT has been withheld from those payments by the purchaser or the purchaser's conveyancer as required by the RLWT rules; and
(b) any costs payable by the vendor under subclause 4.1(2) have been deducted from those payments by the purchaser or the purchaser's conveyancer.

4.2 If the vendor does not have a conveyancer or the vendor and the purchaser are associated persons and if the vendor fails to provide the information required under subclause 4.1(1), then the purchaser may:
(1) defer the payment of the first residential land purchase amount payable under this agreement (and any residential land purchase amount that may subsequently fall due for payment) until such time as the vendor supplies that information; or
(2) on the due date for payment of that residential land purchase amount, or at any time thereafter if payment has been deferred by the purchaser pursuant to this subclause and the vendor has still not provided that information, treat the sale of the property as if it is being made by an offshore RLWT person where there is a requirement to pay RLWT.

4.3 If pursuant to subclause 4.2 the purchaser treats the sale of the property as if it is being made by an offshore RLWT person where there is a requirement to pay RLWT, the purchaser or the purchaser's conveyancer may:
(1) make a reasonable assessment of the amount of RLWT that the purchaser or the purchaser's conveyancer would be required by the RLWT rules to withhold from any residential land purchase amount if the sale is treated in that manner; and
(2) withhold that amount from any residential land purchase amount and pay it to the Commissioner as RLWT.

4.4 Any amount withheld by the purchaser or the purchaser's conveyancer pursuant to subclause 4.3 shall be treated as RLWT that the purchaser or the purchaser's conveyancer is required by the RLWT rules to withhold.

4.5 The purchaser or the purchaser's conveyancer shall give notice to the vendor a reasonable time before payment of any sum due to be paid on account of the purchase price of:
(1) the costs payable by the vendor under subclause 4.1(2) that the purchaser or the purchaser's conveyancer intends to deduct; and
(2) the amount of RLWT that the purchaser or the purchaser's conveyancer intends to withhold.

5.0 Risk and insurance

5.1 The property and chattels shall remain at the risk of the vendor until possession is given and taken.

5.2 If, prior to the giving and taking of possession, the property is destroyed or damaged, and such destruction or damage has not been made good by the settlement date, then the following provisions shall apply:
(1) if the destruction or damage has been sufficient to render the property untenantable and it is untenantable on the settlement date, the purchaser may:
(a) complete the purchase at the purchase price, less a sum equal to any insurance moneys received or receivable by or on behalf of the vendor in respect of such destruction or damage, provided that no reduction shall be made to the purchase price if the vendor's insurance company has agreed to reinstate for the benefit of the purchaser to the extent of the vendor's insurance cover; or
(b) cancel this agreement by serving notice on the vendor in which case the vendor shall return to the purchaser immediately the deposit and any other moneys paid by the purchaser, and neither party shall have any right or claim against the other arising from this agreement or its cancellation;
(2) if the property is not untenantable on the settlement date the purchaser shall complete the purchase at the purchase price less a sum equal to the amount of the diminution in value of the property which, to the extent that the destruction or damage to the property can be made good, shall be deemed to be equivalent to the reasonable cost of reinstatement or repair;
~~(3) in the case of a property zoned for rural purposes under an operative District Plan, damage to the property shall be deemed to have rendered the property untenantable where the diminution in value exceeds an amount equal to 20% of the purchase price; and~~
(4) if the amount of the diminution in value is disputed, the parties shall follow the same procedure as that set out in subclause 8.4 for when an amount of compensation is disputed.

5.3 The purchaser shall not be required to take over any insurance policies held by the vendor.

6.0 Title, boundaries and requisitions

6.1 The vendor shall not be bound to point out the boundaries of the property except that on the sale of a vacant residential lot which is not limited as to parcels the vendor shall ensure that all boundary markers required by the Cadastral Survey Act 2002 and any related rules and regulations to identify the boundaries of the property are present in their correct positions at the settlement date.

6.2 (1) The purchaser is deemed to have accepted the vendor's title ~~except as to objections or requisitions which the purchaser is entitled to make and notice of which the purchaser serves on the vendor on or before the earlier of:~~
~~(a) the tenth working day after the date of this agreement; or~~
~~(b) the settlement date.~~
~~(2) Where the transfer of the property is to be registered against a new title yet to be issued, the purchaser is deemed to have accepted the title except as to such objections or requisitions which the purchaser is entitled to make and notice of which the purchaser serves on the vendor on or before the fifth working day following the date the vendor has given the purchaser notice that the title has been issued and a search copy of it as defined in section 172A of the Land Transfer Act 1952 is obtainable.~~
~~(3) If the vendor is unable or unwilling to remove or comply with any objection or requisition as to title, notice of which has been served on the vendor by the purchaser, then the following provisions will apply:~~
~~(a) the vendor shall notify the purchaser ("a vendor's notice") of such inability or unwillingness on or before the fifth working day after the date of service of the purchaser's notice;~~
~~(b) if the vendor does not give a vendor's notice the vendor shall be deemed to have accepted the objection or requisition and it shall be a requirement of settlement that such objection or requisition shall be complied with before settlement;~~
~~(c) if the purchaser does not on or before the fifth working day after service of a vendor's notice notify the vendor that the purchaser waives the objection or requisition, either the vendor or the purchaser may (notwithstanding any intermediate negotiations) by notice to the other, cancel this agreement.~~
~~(4) In the event of cancellation under subclause 6.2(3), the purchaser shall be entitled to the immediate return of the deposit and any other moneys paid under this agreement by the purchaser and neither party shall have any right or claim against the other arising from this agreement or its cancellation. In particular, the purchaser shall not be entitled to any interest or to the expense of investigating the title or to any compensation whatsoever.~~

~~6.3 (1) If the title to the property being sold is a cross lease title or a unit title and there are:~~
~~(a) in the case of a cross lease title:~~
~~(i) alterations to the external dimensions of any leased structure; or~~
~~(ii) buildings or structures not intended for common use which are situated on any part of the land that is not subject to a restricted user covenant;~~
~~(b) in the case of a unit title, encroachments out of the principal unit or accessory unit title space (as the case may be):~~
~~then the purchaser may requisition the title under subclause 6.2 requiring the vendor:~~
~~(c) in the case of a cross lease title, to deposit a new plan depicting the buildings or structures and register a new cross lease or cross leases (as the case may be) and any other ancillary dealings in order to convey good title; or~~
~~(d) in the case of a unit title, to deposit an amendment to the unit plan, a redevelopment plan or new unit plan (as the case may be) depicting the principal and/or accessory units and register such transfers and any other ancillary dealings in order to convey good title.~~

Consent Issued BC170037

(2) The words "alterations to the external dimensions of any leased structure" shall only mean alterations which are attached to the leased structure and enclosed.

6.4 Except as provided by section 7 of the Contractual Remedies Act 1979, no error, omission, or misdescription of the property or the title shall enable the purchaser to cancel this agreement but compensation, if claimed by notice before settlement in accordance with subclause 8.1 but not otherwise, shall be made or given as the case may require.

6.5 The vendor shall not be liable to pay for or contribute towards the expense of erection or maintenance of any fence between the property and any contiguous land of the vendor but this proviso shall not enure for the benefit of any subsequent purchaser of the contiguous land; and the vendor shall be entitled to require the inclusion of a fencing covenant to this effect in any transfer of the property.

7.0 Vendor's warranties and undertakings

7.1 The vendor warrants and undertakes that at the date of this agreement the vendor has not:
(1) received any notice or demand and has no knowledge of any requisition or outstanding requirement:
(a) from any local or government authority or other statutory body; or
(b) under the Resource Management Act 1991; or
(c) from any tenant of the property; or
(d) from any other party; or
(2) given any consent or waiver,
which directly or indirectly affects the property and which has not been disclosed in writing to the purchaser.

7.2 The vendor warrants and undertakes that at settlement:
(1) The chattels and all plant, equipment, systems or devices which provide any services or amenities to the property, including, without limitation, security, heating, cooling, or air-conditioning, are delivered to the purchaser in reasonable working order, but in all other respects in their state of repair as at the date of this agreement (fair wear and tear excepted) but failure so to deliver them shall only create a right of compensation.
(2) All electrical and other installations on the property are free of any charge whatsoever.
(3) There are no arrears of rates, water rates or charges outstanding on the property.
(4) Where an allowance has been made by the vendor in the settlement statement for incomings receivable, the settlement statement correctly records those allowances including, in particular, the dates up to which the allowances have been made.
(5) Where the vendor has done or caused or permitted to be done on the property any works:
(a) any permit, resource consent, or building consent required by law was obtained; and
(b) to the vendor's knowledge, the works were completed in compliance with those permits or consents; and
(c) where appropriate, a code compliance certificate was issued for those works.
(6) Where under the Building Act, any building on the property sold requires a compliance schedule:
(a) the vendor has fully complied with any requirements specified in any compliance schedule issued by a territorial authority under the Building Act in respect of the building;
(b) the building has a current building warrant of fitness; and
(c) the vendor is not aware of any reason, that the vendor has not disclosed in writing to the purchaser, which would prevent a building warrant of fitness from being supplied to the territorial authority when the building warrant of fitness is next due.
(7) Since the date of this agreement, the vendor has not given any consent or waiver which directly or indirectly affects the property.
(8) Any notice or demand received by the vendor, which directly or indirectly affects the property, after the date of this agreement:
(a) from any local or government authority or other statutory body; or
(b) under the Resource Management Act 1991; or
(c) from any tenant of the property; or
(d) from any other party,
has been delivered forthwith by the vendor to either the purchaser or the purchaser's lawyer, unless the vendor has paid or complied with such notice or demand. If the vendor fails to so deliver or pay the notice or demand, the vendor shall be liable for any penalty incurred.
(9) Any chattels included in the sale are the unencumbered property of the vendor.

7.3 If the property is or includes part only of a building, the warranty and undertaking in subclause 7.2(6) does not apply. Instead the vendor warrants and undertakes at the date of this agreement that, where under the Building Act the building of which the property forms part requires a compliance schedule:
(1) to the vendor's knowledge, there has been full compliance with any requirements specified in any compliance schedule issued by a territorial authority under the Building Act in respect of the building;
(2) the building has a current building warrant of fitness; and
(3) the vendor is not aware of any reason, that the vendor has not disclosed in writing to the purchaser, which would prevent a building warrant of fitness from being supplied to the territorial authority when the building warrant of fitness is next due.

7.4 The vendor warrants and undertakes that on or immediately after settlement:
(1) If the water and wastewater charges are determined by meter, the vendor will have the water meter read and will pay the amount of the charge payable pursuant to that reading; but if the water supplier will not make special readings, the water and wastewater charges shall be apportioned.
(2) Any outgoings included in the settlement statement are paid in accordance with the settlement statement and, where applicable, to the dates shown in the settlement statement, or will be so paid immediately after settlement.
(3) The vendor will give notice of sale in accordance with the Local Government (Rating) Act 2002 to the territorial authority and regional council in whose district the land is situated and will also give notice of the sale to every other authority that makes and levies rates or charges on the land and to the supplier of water.
(4) Where the property is a unit title, the vendor will notify the body corporate in writing of the transfer of the property and the name and address of the purchaser.

7.5 If the purchaser has not validly cancelled this agreement, the breach of any warranty or undertaking contained in this agreement does not defer the obligation to settle but that obligation shall be subject to the rights of the purchaser at law or in equity, including any rights under subclause 6.4 and any right of equitable set-off.

8.0 Claims for compensation

8.1 If the purchaser claims a right to compensation either under subclause 6.4 or for an equitable set-off:
(1) the purchaser must serve notice of the claim on the vendor on or before the last working day prior to settlement; and
(2) the notice must:
(a) in the case of a claim for compensation under subclause 6.4, state the particular error, omission, or misdescription of the property or title in respect of which compensation is claimed;
(b) in the case of a claim to an equitable set-off, state the particular matters in respect of which compensation is claimed;
(c) comprise a genuine pre-estimate of the loss suffered by the purchaser; and
(d) be particularised and quantified to the extent reasonably possible as at the date of the notice.

8.2 For the purposes of subclause 8.1(1), "settlement" means the date for settlement fixed by this agreement unless, by reason of the conduct or omission of the vendor, the purchaser is unable to give notice by that date, in which case notice may be given on or before the last working day prior to the date for settlement fixed by a valid settlement notice served by either party pursuant to subclause 11.1.

8.3 If the amount of compensation is agreed, it shall be deducted on settlement.

8.4 If the amount of compensation is disputed:
(1) an interim amount shall be deducted on settlement and paid by the purchaser to a stakeholder until the amount of the compensation is determined;
(2) the interim amount must be a reasonable sum having regard to all of the circumstances;
(3) if the parties cannot agree on the interim amount, the interim amount shall be determined by an experienced property lawyer appointed by the parties. The appointee's costs shall be met equally by the parties. If the parties cannot agree on the appointee, the appointment shall be made on the application of either party by the president for the time being of the New Zealand Law Society;
(4) the stakeholder shall lodge the interim amount on interest-bearing call deposit with a bank registered under the Reserve Bank of New Zealand Act 1989 in the joint names of the vendor and the purchaser;
(5) the interest earned on the interim amount net of any withholding tax and any bank or legal administration fees and commission charges shall follow the destination of the interim amount;
(6) the amount of compensation determined to be payable shall not be limited by the interim amount; and
(7) if the parties cannot agree on a stakeholder, the interim amount shall be paid to a stakeholder nominated on the application of either party by the president for the time being of the New Zealand Law Society.

8.5 The procedures prescribed in subclauses 8.1 to 8.4 shall not prevent either party taking proceedings for the specific performance of the contract.

Consent Issued BC170037

BC170037

~~9.0 Unit title and cross lease provisions~~

~~Unit Titles~~

~~9.1 If the property is a unit title, sections 144 to 153 of the Unit Titles Act 2010 ("the Act") require the vendor to provide to the purchaser a pre-contract disclosure statement, a pre-settlement disclosure statement and, if so requested by the purchaser, an additional disclosure statement.~~

~~9.2 If the property is a unit title, the vendor warrants and undertakes as follows:~~

~~(1) The information in the pre-contract disclosure statement provided to the purchaser was complete and correct.~~

~~(2) Apart from regular periodic contributions, no contributions have been levied or proposed by the body corporate that have not been disclosed in writing to the purchaser.~~

~~(3) Not less than five working days before the settlement date, the vendor will provide:~~

~~(a) a certificate of insurance for all insurances effected by the body corporate under the provisions of section 135 of the Act; and~~

~~(b) a pre-settlement disclosure statement from the vendor, certified correct by the body corporate, under section 147 of the Act. Any periodic contributions to the operating account shown in that pre-settlement disclosure statement shall be apportioned. There shall be no apportionment of contributions to any long-term maintenance fund, contingency fund or capital improvement fund.~~

~~(4) There are no other amounts owing by the owner under any provision of the Act or the Unit Titles Act 1972.~~

~~(5) There are no unsatisfied judgments against the body corporate and no proceedings have been instituted against or by the body corporate.~~

~~(6) No order or declaration has been made by any Court against the body corporate or the owner under any provision of the Act or the Unit Titles Act 1972.~~

~~(7) The vendor has no knowledge or notice of any fact which might give rise to or indicate the possibility of:~~

~~(a) the owner or the purchaser incurring any other liability under any provision of the Act or the Unit Titles Act 1972; or~~

~~(b) any proceedings being instituted by or against the body corporate; or~~

~~(c) any order or declaration being sought against the body corporate or the owner under any provision of the Act or the Unit Titles Act 1972.~~

~~(8) The vendor is not aware of proposals to pass any body corporate resolution relating to its rules nor are there any unregistered changes to the body corporate rules which have not been disclosed in writing to the purchaser.~~

~~(9) No lease, licence, easement, or special privilege has been granted by the body corporate in respect of any part of the common property which has not been disclosed in writing to the purchaser.~~

~~(10) No resolution has been passed and no application has been made and the vendor has no knowledge of any proposal for:~~

~~(a) the transfer of the whole or any part of the common property;~~

~~(b) the addition of any land to the common property;~~

~~(c) the cancellation of the unit plan; or~~

~~(d) the deposit of an amendment to the unit plan, a redevelopment plan, or a new unit plan in substitution for the existing unit plan, which has not been disclosed in writing to the purchaser.~~

~~(11) As at settlement, all contributions and other moneys payable by the vendor to the body corporate have been paid in full.~~

~~9.3 If the property is a unit title, in addition to the purchaser's rights under sections 149 and 150 of the Act, and if the vendor does not provide the certificates of insurance and the pre-settlement disclosure statement under section 147 in accordance with the requirements of subclause 9.2(3), the purchaser may:~~

~~(1) postpone the settlement date until the fifth working day following the date on which that information is provided to the purchaser; or~~

~~(2) elect that settlement shall still take place on the settlement date.~~

~~9.4 If the property is a unit title, each party specifies that:~~

~~(1) the facsimile number of the office of that party's lawyer shall be an address for service for that party for the purposes of section 205(1)(d) of the Act; and~~

~~(2) if that party is absent from New Zealand, that party's lawyer shall be that party's agent in New Zealand for the purposes of section 205(2) of the Act.~~

~~9.5 If the property is a unit title, any costs owing by the purchaser to the vendor pursuant to section 148(5) of the Act for providing an additional disclosure statement shall be included in the moneys payable by the purchaser on settlement pursuant to subclause 3.8(1). Such costs may be deducted from the deposit if the purchaser becomes entitled to a refund of the deposit upon cancellation or avoidance of this agreement.~~

~~Unauthorised Structures – Cross Leases and Unit Titles~~

~~9.6 (1) Where structures (not stated in clause 6.0 to be requisitionable) have been erected on the property without:~~

~~(a) in the case of a cross lease title, any required lessors' consent; or~~

~~(b) in the case of a unit title, any required body corporate consent,~~

~~the purchaser may demand within the period expiring on the earlier of:~~

~~(i) the tenth working day after the date of this agreement; or~~

~~(ii) the settlement date,~~

~~that the vendor obtain the written consent of the current lessors or the body corporate (as the case may be) to such improvements ("a current consent") and provide the purchaser with a copy of such consent on or before the settlement date.~~

~~(2) Should the vendor be unwilling or unable to obtain a current consent then the procedure set out in subclauses 6.2(3) and 6.2(4) shall apply with the purchaser's demand under subclause 9.6(1) being deemed to be an objection and requisition.~~

10.0 Conditions and mortgage terms

Particular Conditions

10.1 If particulars of any finance condition(s) are inserted on the front page of this agreement, this agreement is conditional upon the purchaser arranging finance in terms of those particulars on or before the finance date.

10.2 (1) If the purchaser has indicated on the front page of this agreement that a LIM is required:

(a) that LIM is to be obtained by the purchaser at the purchaser's cost;

(b) the purchaser is to request the LIM on or before the fifth working day after the date of this agreement; and

(c) this agreement is conditional upon the purchaser approving that LIM provided that such approval must not be unreasonably or arbitrarily withheld.

(2) If, on reasonable grounds, the purchaser does not approve the LIM, the purchaser shall give notice to the vendor ("the purchaser's notice") on or before the fifteenth working day after the date of this agreement stating the particular matters in respect of which approval is withheld and, if those matters are capable of remedy, what the purchaser reasonably requires to be done to remedy those matters. If the purchaser does not give a purchaser's notice the purchaser shall be deemed to have approved the LIM. If through no fault of the purchaser, the LIM is not available on or before the fifteenth working day after the date of this agreement and the vendor does not give an extension when requested, this condition shall not have been fulfilled and the provisions of subclause 10.8(5) shall apply.

(3) The vendor shall give notice to the purchaser ("the vendor's notice") on or before the fifth working day after receipt of the purchaser's notice advising whether or not the vendor is able and willing to comply with the purchaser's notice by the settlement date.

(4) If the vendor does not give a vendor's notice, or if the vendor's notice advises that the vendor is unable or unwilling to comply with the purchaser's notice, and if the purchaser does not, on or before the tenth working day after the date on which the purchaser's notice is given, give notice to the vendor that the purchaser waives the objection to the LIM, this condition shall not have been fulfilled and the provisions of subclause 10.8(5) shall apply.

(5) If the vendor gives a vendor's notice advising that the vendor is able and willing to comply with the purchaser's notice, this condition is deemed to have been fulfilled, and it shall be a requirement of settlement that the purchaser's notice shall be complied with, and also, if the vendor must carry out work on the property, that the vendor shall obtain the approval of the territorial authority to the work done, both before settlement.

10.3 If the purchaser has indicated on the front page of this agreement that a building report is required, this agreement is conditional upon the purchaser obtaining at the purchaser's cost on or before the tenth working day after the date of this agreement a report on the condition of the buildings and any other improvements on the property that is satisfactory to the purchaser, on the basis of an objective assessment. The report must be prepared in good faith by a suitably-qualified building inspector in accordance with accepted principles and methods. Subject to the rights of any tenants of the property, the vendor shall allow the building inspector to inspect the property at all reasonable times upon reasonable notice for the purposes of preparation of the report. The building inspector may not carry out any invasive testing in the course of inspection without the vendor's prior written consent. If the purchaser avoids this agreement for non-fulfilment of this condition pursuant to subclause 10.8(5), the purchaser must provide the vendor immediately upon request with a copy of the building inspector's report.

10.4 (1) If the purchaser has indicated on the front page of this agreement that OIA Consent is required, this agreement is conditional upon OIA Consent being obtained on or before the Land Act/OIA date shown on the front page of this agreement, the purchaser being responsible for payment of the application fee.

(2) If the purchaser has indicated on the front page of this agreement that OIA Consent is not required, or has failed to indicate whether it is required, then the purchaser warrants that the purchaser does not require OIA Consent.

10.5 If this agreement relates to a transaction to which the Land Act 1948 applies, this agreement is subject to the vendor obtaining the necessary consent by the Land Act/OIA date shown on the front page of this agreement.

10.6 If the Land Act/OIA date is not shown on the front page of this agreement that date shall be the settlement date or a date 65 working days from the date of this agreement whichever is the sooner.

10.7 If this agreement relates to a transaction to which section 225 of the Resource Management Act 1991 applies then this agreement is subject to the appropriate condition(s) imposed by that section.

Consent Issued BC170037
BC170037

Operation of Conditions

10.8 If this agreement is expressed to be subject either to the above or to any other condition(s), then in relation to each such condition the following shall apply unless otherwise expressly provided:
(1) The condition shall be a condition subsequent.
(2) The party or parties for whose benefit the condition has been included shall do all things which may reasonably be necessary to enable the condition to be fulfilled by the date for fulfilment.
(3) Time for fulfilment of any condition and any extended time for fulfilment to a fixed date shall be of the essence.
(4) The condition shall be deemed to be not fulfilled until notice of fulfilment has been served by one party on the other party.
(5) If the condition is not fulfilled by the date for fulfilment, either party may at any time before the condition is fulfilled or waived avoid this agreement by giving notice to the other. Upon avoidance of this agreement, the purchaser shall be entitled to the immediate return of the deposit and any other moneys paid by the purchaser under this agreement and neither party shall have any right or claim against the other arising from this agreement or its termination.
(6) At any time before this agreement is avoided, the purchaser may waive any finance condition and either party may waive any other condition which is for the sole benefit of that party. Any waiver shall be by notice.

Mortgage Terms

10.9 Any mortgage to be arranged pursuant to a finance condition shall be upon and subject to the terms and conditions currently being required by the lender in respect of loans of a similar nature.

10.10 If the vendor is to advance mortgage moneys to the purchaser then, unless otherwise stated, the mortgage shall be in the appropriate "fixed sum" form currently being published by Auckland District Law Society Incorporated.

11.0 Notice to complete and remedies on default

11.1 (1) If the sale is not settled on the settlement date, either party may at any time thereafter serve on the other party a settlement notice.
(2) The settlement notice shall be effective only if the party serving it is at the time of service either in all material respects ready, able, and willing to proceed to settle in accordance with this agreement or is not so ready, able, and willing to settle only by reason of the default or omission of the other party.
(3) If the purchaser is in possession, the vendor's right to cancel this agreement will be subject to sections 28 to 36 of the Property Law Act 2007 and the settlement notice may incorporate or be given with a notice under section 28 of that Act complying with section 29 of that Act.

11.2 Subject to subclause 11.1(3), upon service of the settlement notice the party on whom the notice is served shall settle:
(1) on or before the twelfth working day after the date of service of the notice; or
(2) on the first working day after the 13th day of January if the period of twelve working days expires during the period commencing on the 6th day of January and ending on the 13th day of January, both days inclusive,
time being of the essence, but without prejudice to any intermediate right of cancellation by either party.

11.3 (1) If this agreement provides for the payment of the purchase price by instalments and the purchaser fails duly and punctually to pay any instalment on or within one month from the date on which it fell due for payment then, whether or not the purchaser is in possession, the vendor may immediately give notice to the purchaser calling up the unpaid balance of the purchase price, which shall upon service of the notice fall immediately due and payable.
(2) The date of service of the notice under this subclause shall be deemed the settlement date for the purposes of subclause 11.1.
(3) The vendor may give a settlement notice with a notice under this subclause.
(4) For the purpose of this subclause a deposit is not an instalment.

11.4 If the purchaser does not comply with the terms of the settlement notice served by the vendor then, subject to subclause 11.1(3):
(1) Without prejudice to any other rights or remedies available to the vendor at law or in equity, the vendor may:
(a) sue the purchaser for specific performance; or
(b) cancel this agreement by notice and pursue either or both of the following remedies namely:
(i) forfeit and retain for the vendor's own benefit the deposit paid by the purchaser, but not exceeding in all 10% of the purchase price; and/or
(ii) sue the purchaser for damages.
(2) Where the vendor is entitled to cancel this agreement, the entry by the vendor into a conditional or unconditional agreement for the resale of the property or any part thereof shall take effect as a cancellation of this agreement by the vendor if this agreement has not previously been cancelled and such resale shall be deemed to have occurred after cancellation.
(3) The damages claimable by the vendor under subclause 11.4(1)(b)(ii) shall include all damages claimable at common law or in equity and shall also include (but shall not be limited to) any loss incurred by the vendor on any bona fide resale contracted within one year from the date by which the purchaser should have settled in compliance with the settlement notice. The amount of that loss may include:
(a) interest on the unpaid portion of the purchase price at the interest rate for late settlement from the settlement date to the settlement of such resale; and
(b) all costs and expenses reasonably incurred in any resale or attempted resale; and
(c) all outgoings (other than interest) on or maintenance expenses in respect of the property from the settlement date to the settlement of such resale.
(4) Any surplus money arising from a resale as aforesaid shall be retained by the vendor.

11.5 If the vendor does not comply with the terms of a settlement notice served by the purchaser, then, without prejudice to any other rights or remedies available to the purchaser at law or in equity the purchaser may:
(1) sue the vendor for specific performance; or
(2) cancel this agreement by notice and require the vendor forthwith to repay to the purchaser any deposit and any other money paid on account of the purchase price and interest on such sum(s) at the interest rate for late settlement from the date or dates of payment by the purchaser until repayment.

11.6 The party serving a settlement notice may extend the term of the notice for one or more specifically stated periods of time and thereupon the term of the settlement notice shall be deemed to expire on the last day of the extended period or periods and it shall operate as though this clause stipulated the extended period(s) of notice in lieu of the period otherwise applicable; and time shall be of the essence accordingly. An extension may be given either before or after the expiry of the period of the notice.

11.7 Nothing in this clause shall preclude a party from suing for specific performance without giving a settlement notice.

11.8 A party who serves a settlement notice under this clause shall not be in breach of an essential term by reason only of that party's failure to be ready and able to settle upon the expiry of that notice.

12.0 Non-merger

12.1 The obligations and warranties of the parties in this agreement shall not merge with:
(1) the giving and taking of possession;
(2) settlement;
(3) the transfer of title to the property;
(4) delivery of the chattels (if any); or
(5) registration of the transfer of title to the property.

13.0 Agent

13.1 If the name of a licensed real estate agent is recorded on this agreement, it is acknowledged that the sale evidenced by this agreement has been made through that agent whom the vendor appoints as the vendor's agent to effect the sale. The vendor shall pay the agent's charges including GST for effecting such sale.

13.2 The agent may provide statistical data relating to the sale to the Real Estate Institute of New Zealand Incorporated.

14.0 Goods and Services Tax

14.1 If this agreement provides for the purchaser to pay (in addition to the purchase price stated without GST) any GST which is payable in respect of the supply made under this agreement then:
(1) the purchaser shall pay to the vendor the GST which is so payable in one sum on the GST date;
(2) where the GST date has not been inserted on the front page of this agreement the GST date shall be the settlement date;
(3) where any GST is not so paid to the vendor, the purchaser shall pay to the vendor:
(a) interest at the interest rate for late settlement on the amount of GST unpaid from the GST date until payment; and
(b) any default GST;
(4) it shall not be a defence to a claim against the purchaser for payment to the vendor of any default GST that the vendor has failed to mitigate the vendor's damages by paying an amount of GST when it fell due under the GST Act; and
(5) any sum referred to in this clause is included in the moneys payable by the purchaser on settlement pursuant to subclause 3.8(1).

14.2 If the supply under this agreement is a taxable supply, the vendor will deliver a tax invoice to the purchaser on or before the GST date or such earlier date as the purchaser is entitled to delivery of an invoice under the GST Act.

14.3 The vendor warrants that any dwelling and curtilage or part thereof supplied on sale of the property are not a supply to which section 5(16) of the GST Act applies.

Consent Issued BC170037
BC170037

14.4 (1) Without prejudice to the vendor's rights and remedies under subclause 14.1, where any GST is not paid to the vendor on or within one month of the GST date, then whether or not the purchaser is in possession, the vendor may immediately give notice to the purchaser calling up any unpaid balance of the purchase price, which shall upon service of the notice fall immediately due and payable.
(2) The date of service of the notice under this subclause shall be deemed the settlement date for the purposes of subclause 11.1.
(3) The vendor may give a settlement notice under subclause 11.1 with a notice under this subclause.

15.0 Zero-rating

15.1 The vendor warrants that the statement on the front page regarding the vendor's GST registration status in respect of the supply under this agreement is correct at the date of this agreement.

15.2 The purchaser warrants that any particulars stated by the purchaser in Schedule 2 are correct at the date of this agreement.

15.3 Where the particulars stated on the front page and in Schedule 2 indicate that:
(1) the vendor is and/or will be at settlement a registered person in respect of the supply under this agreement;
(2) the recipient is and/or will be at settlement a registered person;
(3) the recipient intends at settlement to use the property for making taxable supplies; and
(4) the recipient does not intend at settlement to use the property as a principal place of residence by the recipient or a person associated with the recipient under section 2A(1)(c) of the GST Act,
GST will be chargeable on the supply under this agreement at 0% pursuant to section 11(1)(mb) of the GST Act.

15.4 If GST is chargeable on the supply under this agreement at 0% pursuant to section 11(1)(mb) of the GST Act, then on or before settlement the purchaser will provide the vendor with the recipient's name, address, and registration number if any of those details are not included in Schedule 2 or they have altered.

15.5 If any of the particulars stated by the purchaser in Schedule 2 should alter between the date of this agreement and settlement, the purchaser shall notify the vendor of the altered particulars and of any other relevant particulars in Schedule 2 which may not have been completed by the purchaser as soon as practicable and in any event no later than two working days before settlement. The purchaser warrants that any altered or added particulars will be correct as at the date of the purchaser's notification. If the GST treatment of the supply under this agreement should be altered as a result of the altered or added particulars, the vendor shall prepare and deliver to the purchaser or the purchaser's lawyer an amended settlement statement if the vendor has already tendered a settlement statement, and a credit note or a debit note, as the case may be, if the vendor has already issued a tax invoice.

15.6 If
(1) the particulars in Schedule 2 state that part of the property is being used as a principal place of residence at the date of this agreement; and
(2) that part is still being so used at the time of the supply under this agreement,
the supply of that part will be a separate supply in accordance with section 5(15)(a) of the GST Act.

15.7 If
(1) the particulars stated in Schedule 2 indicate that the recipient intends to use part of the property as a principal place of residence by the recipient or a person associated with the recipient under section 2A(1)(c) of the GST Act; and
(2) that part is the same part as that being used as a principal place of residence at the time of the supply under this agreement,
then the references in subclauses 15.3 and 15.4 to "the property" shall be deemed to mean the remainder of the property excluding that part and the references to "the supply under this agreement" shall be deemed to mean the supply under this agreement of that remainder.

~~16.0 Supply of a Going Concern~~

~~16.1 If there is a supply under this agreement to which section 11(1)(mb) of the GST Act does not apply but which comprises the supply of a taxable activity that is a going concern at the time of the supply, then, unless otherwise expressly stated herein:~~
~~(1) each party warrants that it is a registered person or will be so by the date of the supply;~~
~~(2) each party agrees to provide the other party by the date of the supply with proof of its registration for GST purposes;~~
~~(3) the parties agree that they intend that the supply is of a taxable activity that is capable of being carried on as a going concern by the purchaser; and~~
~~(4) the parties agree that the supply made pursuant to this agreement is the supply of a going concern on which GST is chargeable at 0%.~~

~~16.2 If it subsequently transpires that GST is payable in respect of the supply and if this agreement provides for the purchaser to pay (in addition to the purchase price without GST) any GST which is payable in respect of the supply made under this agreement, then the provisions of clause 14.0 of this agreement shall apply.~~

~~17.0 Limitation of Liability~~

~~17.1 If any person enters into this agreement as trustee of a trust, then:~~
~~(1) That person warrants that:~~
~~(a) the person has power to enter into this agreement under the terms of the trust;~~
~~(b) the person has properly signed this agreement in accordance with the terms of the trust;~~
~~(c) the person has the right to be indemnified from the assets of the trust and that right has not been lost or impaired by any action of that person including entry into this agreement; and~~
~~(d) all of the persons who are trustees of the trust have approved entry into this agreement.~~
~~(2) If that person has no right to or interest in any assets of the trust except in that person's capacity as a trustee of the trust, that person's liability under this agreement will not be personal and unlimited but will be limited to the actual amount recoverable from the assets of the trust from time to time ("the limited amount"). If the right of that person to be indemnified from the trust assets has been lost or impaired, that person's liability will become personal but limited to the extent of that part of the limited amount which cannot be recovered from any other person.~~

~~18.0 Counterparts~~

~~18.1 This agreement may be executed in two or more counterparts, all of which will together be deemed to constitute one and the same agreement. A party may enter into this agreement by signing a counterpart copy and sending it to the other party, including by facsimile or e-mail.~~

FURTHER TERMS OF SALE

Consent Issued BC170037

REFER TO "FURTHER TERMS OF SALE" ATTACHED

Auckland District Law Society Inc & Real Estate Institute of New Zealand Inc
Copyright
July 2016

SCHEDULE 1

List all chattels included in the sale

(strike out or add as applicable)

~~**Stove**~~ ~~**Fixed floor coverings**~~ ~~**Blinds**~~ ~~**Curtains**~~ ~~**Light fittings**~~

Consent Issued BC170037

BC170037

SCHEDULE 2

(GST Information - see clause 15.0)

This Schedule must be completed if the vendor has stated on the front page that the vendor is registered under the GST Act in respect of the transaction evidenced by this agreement and/or will be so registered at settlement. Otherwise there is no need to complete it.

Section 1

1.	The Vendor's registration number (if already registered): 65 374 935	
2.	Part of the property is being used as a principal place of residence at the date of this agreement. That part is: (e.g. "the main farmhouse" or "the apartment above the shop")	~~Yes~~/No
3.	The purchaser is registered under the GST Act and/or will be so registered at settlement.	Yes/~~No~~
4.	The purchaser intends at settlement to use the property for making taxable supplies.	Yes/~~No~~

If the answer to either or both of question 3 and 4 is "No", go to question 7

5.	The purchaser's details are as follows:	
(a)	Full name: STONEWOOD HOMES (CHCH) FRANCHISE LTD	
(b)	Address: 10 LOGISTICS DRIVE CHRISTCHURCH	
(c)	Registration number (if already registered): 119-041-791	
6.	The purchaser intends at settlement to use the property as a principal place of residence by the purchaser or a person associated with the purchaser under section 2A(1)(c) of the GST Act (connected by blood relationship, marriage, civil union, de facto relationship or adoption). **OR** The purchaser intends at settlement to use part of the property as a principal place of residence by the purchaser or a person associated with the purchaser under section 2A(1)(c) of the GST Act. That part is: (e.g. "the main farmhouse" or "the apartment above the shop")	~~Yes~~/No ~~Yes~~/No
7.	The purchaser intends to direct the vendor to transfer title to the property to another party ("nominee")	~~Yes~~/No

If the answer to question 7 is "Yes", then please continue. Otherwise, there is no need to complete this Schedule any further.

Section 2

8.	The nominee is registered under the GST Act and/or is expected by the purchaser to be so registered at settlement.	Yes/No
9.	The purchaser expects the nominee at settlement to use the property for making taxable supplies.	Yes/No

If the answer to either or both of questions 8 and 9 is "No", there is no need to complete this Schedule any further.

10.	The nominee's details (if known to the purchaser) are as follows:	
(a)	Full name:	
(b)	Address: N.A	
(c)	Registration number (if already registered):	
11.	The purchaser expects the nominee to intend at settlement to use the property as a principal place of residence by the nominee or a person associated with the nominee under section 2A(1)(c) of the GST Act (connected by blood relationship, marriage, civil union, de facto relationship or adoption). **OR** The purchaser expects the nominee to intend at settlement to use part of the property as a principal place of residence by the purchaser or a person associated with the purchaser under section 2A(1)(c) of the GST Act. That part is: (e.g. "the main farmhouse" or "the apartment above the shop").	Yes/No Yes/No

WARNING *(This warning does not form part of this agreement)*

This is a binding contract. **Read the information set out on the back page before signing.**

Acknowledgements

Where this agreement relates to the sale of a residential property and this agreement was provided to the parties by a real estate agent, or by a licensee on behalf of the agent, the parties acknowledge that they have been given the guide about the sale of residential property approved by the Real Estate Agents Authority.
Where this agreement relates to the sale of a unit title property, the purchaser acknowledges that the purchaser has been provided with a pre-contract disclosure statement under section 146 of the Unit Titles Act 2010.

Signature of purchaser(s)	Signature of vendor(s)

FURTHER TERMS OF SALE

16.0 DEFINITIONS AND INTERPRETATION

Definitions

16.1 In this Agreement, unless the context otherwise permits:

"Commonly Owned Property" means any land held in shares by some or all of the registered proprietors of the within lots of the Development for the purpose of access road or of the better enjoyment of the Development.

"Consent" means the full and final approval of the Scheme Plan by the Relevant Authority, in terms in all respects acceptable to the Vendor including written consents and approvals from parties other than the Vendor and the Relevant Authority necessary to give effect to the Development, including the disposal of any objection or appeal and the expiry of any objection or appeal period.

"Covenanting Lot" means the Property which the Purchaser is acquiring excluding any interest in any Commonly Owned Property, if any.

"Covenants" means the covenants to be registered against the certificate of title for the Property as set out in clause 18.1 of these Further Terms of Sale.

"Development" means the staged development and subdivision of the Land situated between Kippenberger Avenue and Northbrook Road, Rangiora by the Vendor and its associated companies.

"General Conditions" means the General Conditions of Sale set out in the 9th edition 2012 (5) of the Auckland District Law Society/Real Estate Institute of New Zealand Agreement for Sale and Purchase of Real Estate form being part of this Agreement.

"GST Date" means the Settlement Date.

"Land" means the land comprised in certificates of title 657799 and CB7D/629 (Canterbury Registry) and the surrounding land owned or to be owned by the Vendor or its associated companies, if any.

"Net Interest" means the interest earned accrued on the deposit held in the Vendor's solicitors' trust account less withholding tax, Vendor solicitors' commission and any bank charges.

"Possession Date" means the Settlement Date.

"Purchase Price" means the amount of purchase price set out on the front page of this Agreement or the purchase price adjusted in accordance with clause 17.7, if applicable.

"Property" means the lot or lots of land being purchased by the Purchaser pursuant to this Agreement.

"Relevant Authority" means any corporation, including any government, local territorial authority, statutory or non-statutory authority or body having jurisdiction over the Land or any part thereof.

"Scheme Plan" means the plan of subdivision for the Development as varied or amended by the Vendor from time to time and incorporating the Property which is comprised in stages 2 and 3 of the Development.

"Settlement Date" means:

Six months

~~the fifth working day~~ following the date on which the Vendor has given the Purchaser notice that a search copy, as defined in section 172A of the Land Transfer Act 1952) of the certificate of title for the Property is available;

"Specified Event" means war, civil disorder, monetary or economic developments, natural hazards, acts of Government or other factors beyond the reasonable control of the Vendor whether similar or not.

"Survey Plan" means the plan prepared or to be prepared for the Vendor and incorporating the Property the deposit of which will create a separate legal title to the Property in accordance with the Scheme Plan.

"Unconditional Date" means the date on which all the conditions in this Agreement have been fulfilled or waived.

Conflict

16.2 If there is a conflict between these Further Terms of Sale and the General Terms of Sale the Further Terms of Sale shall apply.

16.3 If there is a conflict between the provisions of the Scheme Plan and the conditions of the Consent, the conditions of the Consent shall take precedence to and shall be given priority over the Scheme Plan.

Governing law

16.4 This Agreement is governed by the laws of New Zealand, and the parties submit to the exclusive jurisdiction of New Zealand courts in respect of any dispute or proceeding arising out of this Agreement.

Headings

16.5 Headings and subheadings are included for ease of reference and none of the provisions of this Agreement are to be construed or interpreted by reference to such headings or subheadings.

Statutes and regulations

16.6 References to statutes, regulations, ordinances, or by-laws shall be deemed to extend to all statutes, regulations, ordinances or by-laws amending, consolidating or replacing them.

Words, references and derivatives

16.7 In this Agreement, unless the context otherwise requires:

16.7.1 Words importing a particular gender include all other genders.

16.7.2 The singular includes the plural and vice versa.

16.7.3 Words denoting a person include a company, corporation, firm or partnership.

16.7.4 Whenever a body corporate is a party, the words designating such body corporate shall extend to and include such body corporate, its successors and permitted assigns.

16.7.5 Where two or more parties are bound by a provision, whether those parties are referred to individually or together, the provision shall bind those parties jointly and each of them severally.

16.7.6 Derivatives of any defined term have a corresponding meaning to that of the defined term.

16.7.7 Reference to anything of a particular nature following upon a general statement shall not in any way derogate from, or limit the application of the general statement.

17.0 DEVELOPMENT AND ISSUE OF TITLE

Acknowledgement as to title

17.1 The Purchaser acknowledges that a separate certificate of title has not yet issued in respect of the lot/s sold under this Agreement.

Vendor to have Scheme Plan approved and to deposit Plan

17.2 The Vendor shall, at the Vendor's expense in all things.

17.2.1 Submit the Scheme Plan to the Relevant Authority for the Consent

And,

17.2.2 obtain a separate certificate of title for the Property.

17.3 The Purchaser shall not be entitled to a transfer of the Property or to call for settlement in accordance with the provisions of this Agreement until a new certificate of title for the Property has been issued.

No warranty

17.4 The Vendor gives no warranty to the Purchaser as to when the Survey Plan will be deposited in the Land Registry, nor as to when the Purchaser will be able to register a memorandum of transfer of the Property to the Purchaser.

Easements, encumbrances, rights and obligations

17.5 The Vendor reserves the right to grant or receive the benefit of any easements, building line restrictions, consent notices or other encumbrances, rights or obligations which may be required in order to satisfy any conditions of the Consent, or the requirements of any statute, regulation or Relevant Authority, or which in the sole discretion of the Vendor are deemed to be necessary or desirable (including but not limited to such easements of right of way as are shown on the Scheme Plan to be created by easement instrument providing for such provisions relating to maintenance as the Vendor in the Vendor's sole discretion deems reasonable. The Purchaser shall take titles to the Property subject to or with the benefit of any such easements, building line restrictions, consent notices, encumbrances, rights or obligations, and shall execute all documents (with the inclusion of all terms considered reasonably desirable by the solicitors for the Vendor) and do such acts and things as may be required to obtain the deposit of the Survey Plan and the implementation of any such easements, building line restrictions, consent notices, encumbrances or other rights or obligations.

Measurements

17.6 All measurements and areas are subject to any variation which may be found necessary upon checking by the Relevant Authority, the Vendor's surveyor, and Land Information New Zealand. If the area of each lot comprised in the Property is varied within a range of less than 10% (ten percent) of the area set out on the attached scheme plan, neither party shall be entitled to bring any claim whatsoever against the other based on any such variation of measurements, nor shall either party be entitled to claim any compensation, damages, right of set off or to make any objection or requisition based on such variation, whether pursuant to clause 6.2 of the General Conditions or otherwise.

17.7 If the area on the certificate of title of the Property varies for more than 10% (ten percent) of the area set out on the front page of this Agreement the Purchase Price shall be adjusted in accordance with the following formula:

$$\text{Adjusted Purchase Price} = \frac{A}{B} \times C$$

Where:

A = the purchase price amount stipulated on the front page of this Agreement

B = the area in square metres of the Property stipulated on the front page of this Agreement

C = the area in square metres stipulated on the certificate of title on the Property

Variations to Scheme Plan

17.8 The Vendor may at any time alter or vary the Scheme Plan and any subsequent plan relating to the Development (including the alteration, variation or cancellation of any proposed easement shown on any such plan) in such manner as the Vendor considers appropriate having regard to the circumstances, and the Purchaser shall not be entitled to claim any compensation, damages, right of set off or to make any objection or requisition based on such alteration, variation or cancellation, whether pursuant to clause 6.2 of the General Conditions or otherwise.

No Caveat

17.9 The Purchaser shall not lodge a caveat against the Vendor's titles to the land of which the Property forms part prior to the issue of separate certificate of title in respect of the Property.

No Representations

17.10 The Purchaser has inspected the Property and has agreed to purchase the same solely in reliance on the Purchaser's own judgment and not on any representation or warranty made by the Vendor or any agent of the Vendor save as is set out specifically in this Agreement.

Stage Development

17.11 The Purchaser acknowledges that the subdivision comprising the Property is part of an ongoing larger development of the Land and its vicinity, such ongoing development will be completed in stages. The Purchaser covenants with the Vendor and its successors in title that the Purchaser:

17.11.1 will not object to the Vendor, its associated companies or their successors in title carrying out the further stages of development of the Land and the area in the vicinity of the Land; and

17.11.2 will not object to any application made to any authority by the Vendor or it's associated companies or their successors in the title in relation to the Development and any further development referred to in clause 17.11.1.

Restriction on Objecting to Future Development

17.12 In consideration of the Vendor entering into this Agreement the Purchaser covenants with the Vendor and/or its nominee(s) that the Purchaser shall not at any time Lodge any Submission against any Planning Proposal to subdivide, develop or use:

17.12.1 The Land;

17.12.2 The Development; and/or

17.12.3 Any land within a 1 kilometre radius of the Land.

17.13 Without limitation, clauses 17.11 and 17.12 binds the successors in title to the Purchaser for the benefit of the Vendor and any successor in title to the Vendor and the covenants referred to in clauses 17.11 and 17.12 may be included in a restrictive covenant and/or memorandum of encumbrance to be registered on the title to the Property on or before settlement.

17.14 The Purchaser (and successors in title) shall provide any necessary written approval to any Planning Proposal if requested by Vendor and/or its nominee(s) and in the event of failing to do so those persons shall be entitled to provide a copy of this Agreement to the relevant consent authority as evidence that such written approval is given.

17.15 For the purposes of clauses 17.12 to 17.14:

17.15.1 the meaning of the words **"Lodge any Submission"** includes (without limitation) personally or through any agent or servant directly or indirectly lodge or support in any way any objection or submission to a Planning Proposal and includes (without limitation) taking any part in a planning hearing, appeal or reference arising in respect of a Planning Proposal whether as a party or otherwise; and

17.15.2 the meaning of the words **"Planning Proposal"** includes (without limitation) any application for resource consent and/or plan change and/or a variation of any nature under or to the relevant District Plan or Proposed District Plan.

Contracts (Privacy) Act 1982

17.16 In terms of section 4 of the Contracts (Privacy) Act 1982, clauses 17.11 to 17.15 are also for the benefit of any nominee and/or assignee of the Vendor or their associated companies and the obligations of the Purchaser under this Agreement may be enforced by such persons as appropriate.

18.0 LAND COVENANTS

18.1 The Purchaser acknowledges and agrees with the Vendor that each lot within Stages 2 and 3 of the Development will be subject to a Development scheme applicable to and for the benefit of such lots comprised in the Scheme Plan and may be bound by the stipulations and restrictions set out below and accordingly the Purchaser both for itself and for its successors in title hereby covenants with and for the benefit of the Vendor and also the registered proprietor or proprietors for the time being of all the other lots on the Survey Plan (which may include existing lots created by an earlier stage of subdivision or future lots created by further subdivision of the balance of the Vendor's land in the Survey Plan) that:

18.1A: The Purchaser will not

18.1A.1 Commence any construction or development on the Covenanting Lot without having first obtained the written approval of the Vendor or the Vendor's agent (who may be nominated by the Vendor) to the plans and specifications and the exterior design and appearance and location of the Purchaser's proposed building, such approval not to be unreasonably withheld when such design is by a registered architect, nor will the Purchaser, if approval is obtained, make any change to the approved plans or specifications or exterior design or appearance or location of the proposed building (whether due to the requirements of the Territorial Authority or otherwise) without first obtaining written approval from the Vendor, such approval not to be unreasonably withheld.

18.1A.2 Erect or permit to be erected on the Covenanting Lot any dwelling other than one single household dwelling house:

a) having an area of at least 160 square metres including garaging of at least 30 square metres; and
b) having at least two windows on the wall facing the street frontage.

18.1A.3 Allow the building construction works on the Property to Commence later than twelve (12) months from the Settlement Date unless written approval of an extension of time is obtained from the Vendor

18.1A.4 Without the written consent of the Vendor or its agent construct any structure using second hand materials other than bricks.

18.1A.5 Erect or permit or suffer to be erected or placed upon the covenanting lot any caravan, shed or hut to be used as a dwelling or temporary dwelling.

18.1A.6 Erect, transport or place upon the Covenanting Lot any kitset home, second hand home or relocatable building (other than builders' sheds which shall only remain upon the Covenanting Lot during the period of construction) of any type or description.

18.1A.7 Erect on the Covenanting Lot any building unless the basement or sub floor area is fully enclosed to the satisfaction of the Vendor.

18 .1A.8 Leave the outside of any dwelling unfinished or exterior walls unpainted or unstained except where cedar cladding or decorative brick/stone are used.

18.1A.9 Enter into occupation of any dwelling until the exterior of such dwelling is completed and (where appropriate) painted.

18.1A.10 Allow the vehicle crossing/kerb crossing up to and including road metalling to be cut into pieces or left in an untidy manner.

18.1A.11 Construct any fences other than using timber material without first obtaining the written consent of the Vendor which consent may be withheld in the Vendor's unfettered discretion.

18.1A.12 Permit the Property to be in other than a neat and tidy condition.

18.1A.13 Permit grass to grow longer than 150mm above ground level.

18.1A.14 Allow the completion of all landscaping on the Property to extend beyond four months from the date of occupancy of the dwelling thereon.

18.1 A.15 Interfere with or remove any survey pegs or markers on the Property and in the event of the Purchaser or his agent, workmen, contractors, guests or invitees so doing the Purchaser agrees to reimburse the Vendor for all costs and expenses in having such pegs or markers replaced by a registered surveyor.

18.1A.16 Prior to construction of a dwelling on the Property has commenced allow any signage including any "For Sale" sign on the property without the consent of the Vendor which consent may be withheld in the Vendor's unfettered discretion.

18.1B No fence shall be constructed within one metre of a Lot's boundary fronting a street or access road.

18.1C These covenants shall apply for a period of ten years following registration on the title to the property.

Enforcement

18.2 If there should be any breach or non-observance of any of the foregoing covenants and without prejudice to any other liability which the Purchaser may have to any person having the benefit of these covenants the Purchaser will upon written demand being made by the Vendor or any or all of the registered proprietors having the benefit of these covenants:

18.2.1 pay to the person making such demand as liquidated damages the Sum of NZ$200.00 per day for every day that such breach of non-observance continues after the date upon which written demand is made or a sum equal to the cost of rectifying such breach or non-observance whichever is the greater, and

18 .2.2 remove or cause to be removed from the Property any dwelling house, garage, building or other structure erected or placed on or adjacent to the Property in breach or non-observance of the foregoing covenants; and

18.2.3 replace any building materials used in breach or non-observance of the foregoing covenants; and

18.2.4 cause any activity on the Property which contravenes the covenants to immediately cease.

18.3 In the event of default by the Purchaser under the preceding clause the Vendor or the Vendor's authorised representatives may enter the Property and carry out such work as is necessary to remedy the breach or non-observance at the Purchaser's cost in all respects.

18.4 The Purchaser hereby covenants that the Purchaser will at all times hereafter save harmless and keep indemnified the Vendor from all proceedings, costs, claims and demands in respect of breaches by the Purchaser of the covenants and restrictions contained herein on the part of the Purchaser contained and implied.

Restrictive Covenants

18.5 The Vendor will require to be inserted in the Transfer of the Property to the Purchaser (or may prior to registration of such transfer register against the title to the Property) a restrictive covenant in such form as the Vendor considers appropriate giving effect to the above covenants so as to run with the Property and to bind the Purchaser and all subsequent registered proprietors of the Property (except that the Vendor may make the covenants contained in any Transfer appurtenant only to any one or more of the lots as the Vendor shall decide). Notwithstanding the foregoing, the Purchaser shall not be entitled to require the Vendor to cause the covenants of any other purchaser of any lot within the subdivision to be made appurtenant to the Property. The Vendor shall not be liable to enforce all or any of the covenants

nor shall the Vendor be answerable to the Purchaser for any breach of all or any of the covenants registered against any other lot in the subdivision.

19.0 LOWEST PRICE CLAUSE

19.1 The purchase price for the Property is the lowest price that the parties would have agreed upon for the Property under the rules relating to the accrual treatment of income and expenditure in the relevant Income Tax Act and on that basis no income or expenditure arises under those rules.

20.0 ASSIGNMENT

20.1 The Purchaser will not assign, transfer (whether by nomination or otherwise), or dispose of or alienate the benefit or burden of this Agreement, except with the prior written approval of the Vendor, such approval not to be unreasonably or arbitrarily withheld provided:

20.1.1 the Purchaser's assignee, transferee or disposee shall enter into a deed of covenant with the Vendor, in a form acceptable to the Vendor, to perform the obligations of the Purchaser; and

20.1.2 the Purchaser's assignee, transferee or disposee shall execute a power of attorney in favour of the Vendor or the Vendor's nominee pursuant to clause 22; and

20.1.3 the Purchaser shall pay for all costs (including the Vendor's administration, legal and such other costs relating to the assignment, transfer or disposal); and

20.1.4 the Purchaser shall at all times remain liable for all obligations of the Purchaser hereunder.

20.2 The Vendor may assign or transfer or dispose of or alienate the benefit of this Agreement to any party.

21.0 INVESTMENT AND ACCOUNTING FOR DEPOSIT

21.1 Subject to clause 2.4 of the General Conditions, the Vendor's solicitor shall hold the deposit on the following terms and conditions:

21.1.1 The deposit shall be invested by the Vendor's solicitors in an interest bearing deposit as soon as practicable in the Vendors solicitors Trust Account.

21.1.2 On the unconditional date of this agreement (or such other earlier date if the Vendor becomes entitled earlier), the deposit and Net Interest shall be paid to the Vendor and this clause is sufficient authority to the Vendor's solicitors to make this payment.

21.2 Upon settlement, the Purchaser shall receive a credit against the balance of the purchase price for the amount equal to the Net Interest accrued from the date of investment of the deposit by the Vendor's solicitors until the date this agreement becomes unconditional or the date the deposit is uplifted by the Vendor's solicitors from the interest bearing account for the purpose of settlement.

21.3 Interest withholding tax to be deducted from the interest accrued from the deposit shall be the tax rate applicable to the Vendor from time to time.

21.4 The Vendor's solicitors will not be liable to any party by reason of any delay in investing the deposit, or any failure on the part of the bank, or any cost deducted by the bank for handling the deposit or any interest thereon.

22.0 POWER OF ATTORNEY

22.1 In consideration of the Vendor entering into this agreement the Purchaser irrevocably nominates and appoints the Vendor or a director of the Vendor as the Purchaser's true and lawful attorney of the Purchaser for the purposes of signing all documents, consents and plans and to perform all things necessary to complete the Development.

22.2 If required by the Vendor, the Purchaser shall sign a separate power of attorney to be prepared by the Vendor's solicitors to give effect to clause 20.1. The Purchaser shall deliver the Power of Attorney duly executed by the Purchaser to the Vendor's solicitors within seven working days of the Purchaser receiving the said Power of Attorney.

23.0 CONFIDENTIALITY

23.1 The Purchaser agrees that the terms of this agreement shall maintain as confidential at all times until the Settlement Date, and shall not at any time before the Settlement Date, directly or indirectly:

23.1.1 Disclose or permit to be disclosed to any person; or

23.1.2 Use for itself; or

23.1.3 Use to the detriment of the Vendor;
any terms of this Agreement except:

23.1.4 As required by law; or

23.1.5 As is already or becomes public knowledge, otherwise than as a result of a breach by the Purchaser disclosing or using that the terms of this Agreement; or

23.1.6 As authorised in writing by the other party; or

23.1.7 To the extent reasonably required by the Purchaser (and, without

limiting the effect of this clause, the Purchaser may disclose the terms of this Agreement to such only of its officers, bankers or professional advisers, on a "need to know" basis, as is reasonably required by the purchaser).

24.0 FORCE MAJEURE

24.1 If the Specified Event shall prevent the Vendor from commencing or continuing the Development or render it impracticable for the Vendor to commence with or continue the Development, then the Vendor may by notice in writing to the Purchaser advise of the Specified Event and cancel this agreement.

24.2 If the agreement is cancelled pursuant to clause 24.1, the Purchaser shall be entitled to the return of any deposit paid and neither party shall have any right or claim against the other.

25.0 LIABILITY

25.1 Where a person enters into this agreement as a trustee of a trust or as a director or as an agent on behalf of a company, that person shall also be liable personally as though that person is the Purchaser. ·

26.0 EXECUTION BY FACSIMILE

26.1 A party may enter into this agreement by:

26.1.1 Copies: signing any number of copies each of which will be treated as an original and all of which taken together will constitute a single document; and

26.1.2 Facsimile: signing a copy of this agreement and sending it to the other party by facsimile;

26.1.3 Email: signing a copy of this agreement and sending a scanned copy to the other party by email.

26.2 Execution and delivery of a signed agreement by facsimile or by email in accordance with clause 26.1 shall satisfy the requirement under section 24 of the Property Law Act 2007.

27. VENDOR'S CONDITION

27.1 This Agreement is conditional on the Vendor completing the relevant staged Development resulting a new separate title issued in respect of the Property, or in respect of each lot within the Property if the Property comprised more than one lot, issuing no later than 31 March 2017. The condition in this clause 27 is inserted for the sole benefit of the Vendor and may be waived by the Vendor at any time prior to this Agreement being cancelled.

28. DUE DILIGENCE BY PURCHASER

28.1 This agreement is conditional upon the Purchaser being satisfied that the property is suitable for the Purchaser's intended use following the Purchaser undertaking an investigation of the property.

28.2 The parties acknowledge that the condition clause 28.1 is inserted for the sole benefit of the Purchaser and may at any time prior to this agreement being cancelled be waived by the Purchaser giving written notice of the waiver to the Vendor or its solicitor.

28.3 The date of satisfaction of the condition under clause 28.1 shall be fifteen (15) working days from the date this agreement is signed by both parties.

29. GST INVOICE.

The purchaser agrees that the purchaser shall not be entitled to call for a GST tax invoice until after settlement has taken place.

30. PROHIBITION ON DEALING.

Until the Purchaser has completed the Purchaser's settlement of the purchase of the property with the Vendor, the Purchaser shall not, without the consent in writing of the Vendor first had and obtained, transfer, assign, encumber, market, advertise for sale or otherwise deal with the Purchaser's interest under this Agreement or the Property.

BC170037

Consent Issued BC170037

Comprised In - CsT CB7D/629 & 657799
Total Area - 11.04ha
Owner - Freeman Homes Limited

Scale 1:500 (m)

BASELINE GROUP

EXISTING EASEMENTS			
NATURE	SERVIENT TEN		DOM TEN / GRANTEE
	LOT	SHOWN	
Right to drain water in gross	34 35 36 37	YA YB, ZA ZB ZC	T5190068.1

MEMORANDUM OF EASEMENTS			
NATURE	SERVIENT TEN		DOM TEN / GRANTEE
	LOT	SHOWN	
Right of way, right to drain sewage & water, Right to convey water, electricity, telecommunications & computer media	23 22 21	H I J	21, 22 21, 23 22, 23
Right to convey telecommunications and computer media in gross	23 22 21	H I J	Chorus New Zealand Ltd

A full assessment of easements will be undertaken after the survey has been completed. This may result in additional easements to those already shown

Areas and dimensions are subject to final survey

PROPOSED SUBDIVISION OF LOT 1 DP 25796 & Lot 500 DP 476332

Scale	1:500 (A1)
Date	DEC 2015
Design	JF
Drawn	EY
Review	JF

rev.	date	amendment

revision 1

sheet 2 OF 5

Baseline Group Limited P.O. Box 100 Leeston 7656
www.baselinegroup.co.nz info@baselinegroup.co.nz 03 3248 206

Consent Issued BC170037

BC170037

BEFORE SIGNING THE AGREEMENT

- It is recommended both parties seek professional advice before signing. This is especially so if:
  - there are any doubts. Once signed, this will be a binding contract with only restricted rights of termination.
  - property such as a hotel or a farm is being sold. The agreement is designed primarily for the sale of residential and commercial property.
  - the property is vacant land in the process of being subdivided or there is a new unit title or cross lease to be issued. In these cases additional clauses may need to be inserted.
  - there is any doubt as to the position of the boundaries.
  - the purchaser wishes to check the weathertightness and soundness of construction of any dwellings or other buildings on the land.
- The purchaser should investigate the status of the property under the Council's District Plan. The property and those around it are affected by zoning and other planning provisions regulating their use and future development.
- The purchaser should investigate whether necessary permits, consents and code compliance certificates have been obtained from the Council where building works have been carried out. This investigation can be assisted by obtaining a LIM from the Council.
- The purchaser should compare the title plans against the physical location of existing structures where the property is a unit title or cross lease. Structures or alterations to structures not shown on the plans may result in the title being defective.
- In the case of a unit title, before the purchaser enters into the agreement:
  - the vendor **must** provide to the purchaser a pre-contract disclosure statement under section 146 of the Unit Titles Act 2010;
  - the purchaser should check the minutes of the past meetings of the body corporate, enquire whether there are any issues affecting the units and/or the common property, check the body corporate's long term maintenance plan and enquire whether the body corporate has imposed or proposed levies for a long term maintenance fund or any other fund for the maintenance of, or remedial or other work to, the common property.
- The vendor should ensure the warranties and undertakings in clauses 7 and 9:
  - are able to be complied with; and if not
  - the applicable warranty is deleted from the agreement and any appropriate disclosure is made to the purchaser.
- Both parties should ensure the chattels list in Schedule 1 is accurate.
- Before signing this agreement, both parties should seek professional advice regarding the GST treatment of the transaction. This depends upon the GST information supplied by the parties and could change before settlement if that information changes.

THE ABOVE NOTES ARE NOT PART OF THIS AGREEMENT AND ARE NOT A COMPLETE LIST OF MATTERS WHICH ARE IMPORTANT IN CONSIDERING THE LEGAL CONSEQUENCES OF THIS AGREEMENT.

PROFESSIONAL ADVICE SHOULD BE SOUGHT REGARDING THE EFFECT AND CONSEQUENCES OF ANY AGREEMENT ENTERED INTO BETWEEN THE PARTIES.

THE PURCHASER IS ENTITLED TO A COPY OF ANY SIGNED OFFER AT THE TIME IT IS MADE.

AGREEMENT FOR SALE AND PURCHASE OF REAL ESTATE

© *This form is copyright to the Real Estate Institute of New Zealand Incorporated and Auckland District Law Society Incorporated*

DATE:

VENDOR:
Freeman Homes Limited

Contact Details:
P O Box 20236
Bishopdale
Christchurch 8543
M Freeman 027 432 1550

VENDOR'S LAWYERS:

Firm: Meares Williams

Individual Acting: Gerard Richardson

Contact Details: P O Box 660
Christchuch 8140
Phone: 03 379 0059
Fax: 03 374 9284
Email: gerard.richardson@meareswilliams.co.nz

PURCHASER:

Contact Details:

PURCHASER'S LAWYERS:

Firm: Anthony Harper

Individual Acting: Dominic Fitzhert

Contact Details:

LICENSED REAL ESTATE AGENT: Twiss & Keir Realty Limited -

Agent's Name: a Member of the Harcourts Group

Manager: John Tucker

Salesperson: Gary McNicholl (027 438 4279)

Contact Details: 15 Good Street
RANGIORA
7400
Phone: 03 313 6158
Fax: 03 313 4788
Email: rangiora@harcourts.co.nz

Consent Issued BC170037

BC170037

WAIMAKARIRI
DISTRICT COUNCIL

Our Reference: RC165188 RC125124 / 161107114394
Valuation Reference: 2165902368

07 November 2016

Freeman Homes Limited
C/- Baseline Group Limited
PO Box 100
LEESTON 7656

Attention: Kylie Hall

Dear Sir/Madam

DECISION ON RESOURCE CONSENT APPLICATION
FREEMAN HOMES LIMITED - 73 & 83 KIPPENBERGER AVENUE, RANGIORA

Please find enclosed a copy of the decision reached by the Plan Implementation Manager under delegated authority from the Council on the above application.

We also enclose information relating to rights of appeal, lapsing of consent (where applicable), and other legal requirements.

Yours faithfully

John Cook
RESOURCE MANAGEMENT PLANNER

Encl

215 High Street
Private Bag 1005
Rangiora 7440, New Zealand
waimakariri.govt.nz

phone 03 311 8900
or 03 327 6834
fax 03 313 4432

Accredited as an International 'Safe Community' by the
World Health Organisation Collaborating Centre on Community Safety

RC165188 / 161107114394

2165902368

WAIMAKARIRI DISTRICT COUNCIL

IN THE MATTER of the Resource Management Act 1991

AND

IN THE MATTER of an application lodged by **Freeman Homes Limited** for a resource consent under Section 88 of the aforementioned Act.

APPLICATION

The applicants sought a resource consent to vary Condition 1 (*General Condition*), Condition 5 (*Staging*), Condition 27 (*Link Strips*) and Condition 28 (*Future Access Lot*) of subdivision consent RC125124 that applies to 73 and 83 Kippenberger Avenue, Rangiora.

This variation is essentially to amend the staging sequence of the overall development, the need to deal with Lot 400 that is no longer required for access purposes, and the re-numbering of the link strips.

DECISION

The Plan Implementation Manager, on the 26th October 2016, approved:

THAT pursuant to Section 127 of the Resource Management Act 1991, consent be granted to vary Condition 1 (*General Condition*), Condition 5 (*Staging*), Condition 27 (*Link Strips*) and Condition 28 (*Future Access Lot*) of subdivision consent RC125124, being the subdivision of Lot 1 DP 25508 and Lot 1 DP 25796, at 73 & 83 Kippenberger Avenue, Rangiora as follows:

Vary Condition 1 to read:

1. The activity shall be carried out in accordance with the attached approved application plans stamped RC165188.

Vary Condition 5 (*Staging*) so to read:

5.1 The Council allows the staging of the development as follows provided all associated conditions have been completed to the Council's satisfaction:

- **Stage 0:** Lots 1 - 6 being the development blocks.
- **Stage 1:** Lots 26 - 33, 52 - 60 & Lot 302 (Road to Vest).
- **Stage 2:** Lots 1 - 14, 34 - 40. Lot 300 (Road to Vest).

- **Stage 3A:** Lots 16 - 25, 63, 64 & Lot 301 (Road to Vest).
- **Stage 3B:** Lots 15, 42 - 44, 61, 62, 65 - 68, Lot 303 (Road to Vest) & Lot 41 (Vest as Local Purpose Recreation Reserve).
- **Stage 4:** Lots 45 - 51, 69 - 82,400, Lot 304 (Road to Vest) & Lot 401 (Vest as Local Purpose Recreation Reserve).
- **Stage 5:** Lots 83 - 97, 108 - 119, Lot 305 (Road to Vest) & Lot 501 (Link Strip).
- **Stage 6:** Lots 98 - 107, 120 - 136, Lot 306 (Road to Vest) & Lot 502 (Link Strip).

Vary Condition 27 (*Link Strips*) so to read:

27.1 Link Strips (Lots 501 and 502) shall be created at the western boundary of the site within development for Stages 5 and 6.

27.2 The cost of the additional services and roading beyond what would normally be required to service this subdivision (the 'Extra Overs Cost') shall be supplied by the consent holder to the Council for approval.

27.3 The approved costs of the Extra Overs Cost shall be recorded in a Link Strip agreement to be prepared by the consent holder and submitted to Council for approval.

27.4 The ownership of the Link Strips shall remain with the consent holder until vested as Road.

27.5 Pursuant to Section 221 of the Resource Management Act 1991, conditions 27.2-27.4 as they apply to Lots 501 and 502 shall be subject to a Consent Notice registered on the Certificates of Title.

Vary Condition 28 (*Future Access Lot*) so to read:

28. <u>Amalgamation Requirement</u>

Pursuant to Section 220(b)(ii) of the Resource Management Act 1991, the Council requires that Lots 51 and 400 be amalgamated with one computer freehold register be issued. (LINZ ref: 1397220)

All other existing consent conditions and advice notes remain unchanged.

REASONS FOR DECISION

Pursuant to Section 113 of the Act the Council was satisfied that:

- The net adverse effects arising on the environment from giving effect to this variation proposal will be nil. The overall thrust of the approved subdivision RC125124 will not change per se'. This is on the basis that the various components of the overall development are to be undertaken largely in similar stages but with the earlier stages to be undertaken in the context of varied timeframes.
- The proposal is not contrary to the objectives and policies of the District Plan.

- No person is deemed to be affected by the proposal to amend the undertaking of the overall subdivision development.

DATED at Rangiora this 7th Day of November 2016

SIGNED by John Cook
RESOURCE MANAGEMENT PLANNER

BC170037

Consent Issued BC170037

WAIMAKARIRI DISTRICT COUNCIL
APPROVED APPLICATION
RC165188
26/10/16
AUTHORISED OFFICER

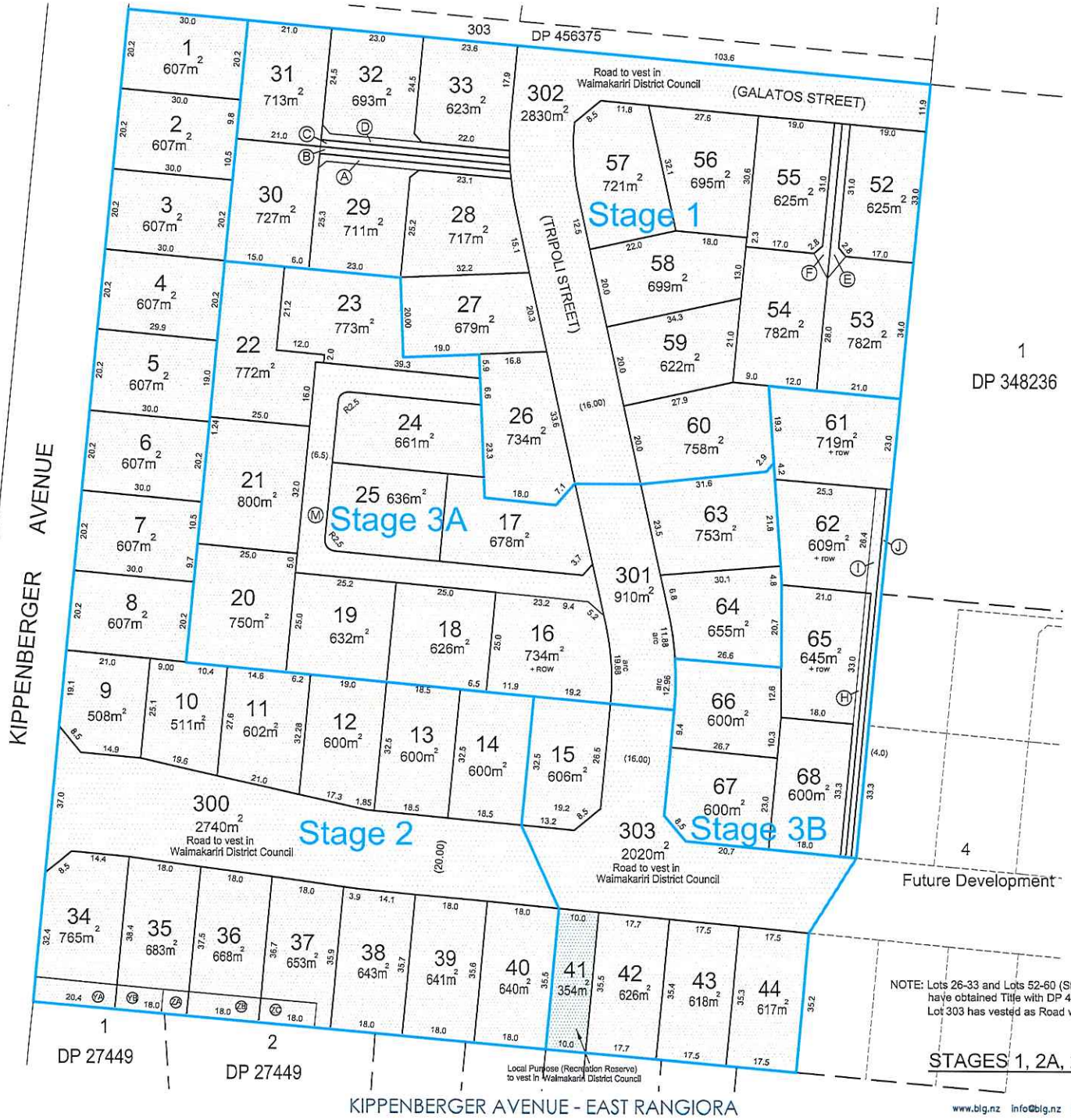

Comprised In - CsT CB7D/629 & 657799
Total Area - 11.04ha
Owner - Freeman Homes Limited

NOTE: Lots 26-33 and Lots 52-60 (Stage 3) have obtained Title with DP 476332.
Lot 303 has vested as Road with DP 476332

STAGES 1, 2A, 2B & 3

BASELINE GROUP

EXISTING EASEMENTS			
NATURE	SERVIENT TEN LOT	SERVIENT TEN SHOWN	DOM TEN / GRANTEE
Right to drain water in gross	34 35 36 37	YA YB, ZA ZB ZC	T519006B.1

MEMORANDUM OF EASEMENTS			
NATURE	SERVIENT TEN LOT	SERVIENT TEN SHOWN	DOM TEN / GRANTEE
Right of way, right to drain sewage & water, Right to convey water, electricity, telecommunications & computer media	29 30 31 32 53 54 65 62 61 16	A B C D E F H I J M	30, 31, 32 29, 31, 32 29, 30, 32 29, 30, 31 54 53 61, 62 61, 65 62, 65 17-25 & Lots 26-27 DP 476332
Right to convey telecommunications and computer media in gross	29 30 31 32 53 54 65 62 61 16	A B C D E F H I J M	Enable Networks Ltd

A full assessment of easements will be undertaken after the survey has been completed. This may result in additional easements to those already shown

Areas and dimensions are subject to final survey

PROPOSED SUBDIVISION OF LOT 1 DP 25796 & Lot 500 DP 476332

Scale	1:500 (A1)
Date	OCT 2016
Design	JF
Drawn	EY
Review	JF

rev.	date	amendment

revision 1

sheet 2 OF 5

Baseline Group Limited P.O. Box 100 Leeston 7656
www.blg.nz info@blg.nz 03 3248 206

BC170037

Consent Issued BC170037

BASELINE GROUP

MEMORANDUM OF EASEMENTS			
NATURE	SERVIENT TEN		DOM TEN / GRANTEE
	LOT	SHOWN	
Right of way, right to drain sewage & water, Right to convey water, electricity, telecommunications & computer media	74 73	K L	73 74
Right to convey telecommunications and computer media in gross	74 73	K L	Enable Networks Ltd

A full assessment of easements will be undertaken after the survey has been completed. This may result in additional easements to those already shown

Areas and dimensions are subject to final survey

PROPOSED SUBDIVISION OF LOT 1 DP 25796 & Lot 500 DP 476332

Scale	1:500 (A1)
Date	SEPT 2016
Design	JF
Drawn	EY
Review	JF

rev.	date	amendment

revision 1a

sheet 3 OF 5

Comprised In - CsT CB7D/629 & 657799
Total Area - 11.04ha
Owner - Freeman Homes Limited

10 5 2 0 10 20
Scale 1:500 (m)

WAIMAKARIRI DISTRICT COUNCIL
APPROVED APPLICATION
RC165188
P.M.Wauing 26/10/16
AUTHORISED OFFICER

Amalgamation Condition

Lots 51 & 400 are to be amalgamated with one Computer Register to issue.

STAGE 4

KIPPENBERGER AVENUE - EAST RANGIORA

BC170037

Consent Issued BC170037

Comprised In - CsT CB7D/629 & 657799
Total Area - 11.04ha
Owner - Freeman Homes Limited

Scale 1:500 (m)

WAIMAKARIRI DISTRICT COUNCIL
APPROVED APPLICATION
RC165188
P.M. Warren 26/10/16
AUTHORISED OFFICER

3
DP 9926

STAGE 5

KIPPENBERGER AVENUE - EAST RANGIORA

A full assessment of easements will be undertaken after the survey has been completed. This may result in additional easements to those already shown

Areas and dimensions are subject to final survey

PROPOSED SUBDIVISION OF LOT 1 DP 25796 & Lot 500 DP 476332

Scale	1:500 (A1)
Date	SEPT 2016
Design	JF
Drawn	EY
Review	JF

rev.	date	amendment

revision 1

sheet 4 OF 5

Baseline Group Limited P.O. Box 100 Leeston 7656

www.blg.nz info@blg.nz 03 3248 206

BC170037

Consent Issued BC170037

Comprised In - CsT CB7D/629 & 657799
Total Area - 11.04ha
Owner - Freeman Homes Limited

Scale 1:500 (m)

WAIMAKARIRI DISTRICT COUNCIL
APPROVED APPLICATION
RC165188
P.M.W 26/10/16
AUTHORISED OFFICER

STAGE 6

A full assessment of easements will be undertaken after the survey has been completed. This may result in additional easements to those already shown

Areas and dimensions are subject to final survey

PROPOSED SUBDIVISION OF LOT 1 DP 25796 & Lot 500 DP 476332

Scale	1: 500 (A1)
Date	SEPT 2016
Design	JF
Drawn	EY
Review	JF

rev.	date	amendment

revision 1

sheet 5 OF 5

Baseline Group Limited P.O. Box 100 Leeston 7656

KIPPENBERGER AVENUE - EAST RANGIORA

www.blg.nz info@blg.nz 03 3248 206

WAIMAKARIRI DISTRICT COUNCIL

RIGHTS OF OBJECTION

RESOURCE MANAGEMENT ACT 1991 & LOCAL GOVERNMENT ACT 2002

RIGHTS OF OBJECTION

The applicant may within 15 working days after the decision being received by them, lodge an objection with the Council against one or more conditions of consent in accordance with Section 357 of the Resource Management Act 1991.

Objections to development contributions are considered under the Local Government Act 2002. Objections must be made in accordance with the statutory guidelines in Section 199 and Schedule 13A of the Local Government Act 2002.

Any objection under the Resource Management Act 1991 or Local Government Act 2002 is required to be made by notice in writing to:

The Plan Implementation Manager
Waimakariri District Council
Private Bag 1005
RANGIORA 7440

If you are in any doubt as to the procedure to be followed, or any matter arising out of the same, it is strongly recommended that you seek professional advice.

LAPSING OF CONSENT

Attention is drawn to Section 125 of the Resource Management Act 1991 which provides that a resource consent shall lapse **five years after the date of commencement** (being the issue date of the consent) or after the expiry of such shorter or longer period as expressively provided for in the consent unless:

(a) The consent is given effect to; or

(b) An application is made to the consent authority to extend the period after which the consent lapses, and the consent authority decides to grant an extension after taking into account –

- (i) whether substantial progress or effort has been, and continues to be, made towards giving effect to the consent; and
- (ii) whether the applicant has obtained approval from persons who may be adversely affected by granting of the extension; and
- (iii) the effect of the extension on the policies and objectives of any plan or proposed plan.

OTHER LEGAL REQUIREMENTS

Section 23 of the Resource Management Act 1991 provides that compliance with the Resource Management Act 1991 (e.g. by obtaining of an appropriate resource consent) does not remove the need to comply with all other applicable Acts, Regulations, Bylaws and rules of law.

WAIMAKARIRI DISTRICT COUNCIL

RIGHTS OF OBJECTION

RESOURCE MANAGEMENT ACT 1991 & LOCAL GOVERNMENT ACT 2002

RIGHTS OF OBJECTION

The applicant may within 15 working days after the decision being received by them, lodge an objection with the Council against one or more conditions of consent in accordance with Section 357 of the Resource Management Act 1991.

Objections to development contributions are considered under the Local Government Act 2002. Objections must be made in accordance with the statutory guidelines in Section 199 and Schedule 13A of the Local Government Act 2002.

Any objection under the Resource Management Act 1991 or Local Government Act 2002 is required to be made by notice in writing to:

The Plan Implementation Manager
Waimakariri District Council
Private Bag 1005
RANGIORA 7440

If you are in any doubt as to the procedure to be followed, or any matter arising out of the same, it is strongly recommended that you seek professional advice.

LAPSING OF CONSENT

Attention is drawn to Section 125 of the Resource Management Act 1991 which provides that a resource consent shall lapse **five years after the date of commencement** (being the issue date of the consent) or after the expiry of such shorter or longer period as expressively provided for in the consent unless:

(a) The consent is given effect to; or

(b) An application is made to the consent authority to extend the period after which the consent lapses, and the consent authority decides to grant an extension after taking into account –

  (i) whether substantial progress or effort has been, and continues to be, made towards giving effect to the consent; and

  (ii) whether the applicant has obtained approval from persons who may be adversely affected by granting of the extension; and

  (iii) the effect of the extension on the policies and objectives of any plan or proposed plan.

OTHER LEGAL REQUIREMENTS

Section 23 of the Resource Management Act 1991 provides that compliance with the Resource Management Act 1991 (e.g. by obtaining of an appropriate resource consent) does not remove the need to comply with all other applicable Acts, Regulations, Bylaws and rules of law.

Consent Issued BC170037

WAIMAKARIRI
DISTRICT COUNCIL

10 March 2017

Our Reference: BC170037.01

Stonewood Homes (Christchurch) Franchisee Limited
PO Box 11036
Sockburn
Christchurch 8443

Dear Sir/Madam

PROJECT INFORMATION MEMORANDUM

Please find enclosed your Project Information Memorandum in respect of the proposed work at 73 Kippenberger Avenue RANGIORA.

Prior to **commencing building work**, the applicant must ensure that a Building Consent has been applied for and issued and that any "authorisations" have been obtained and any conditions of the PIM have been verified.
These include:

Development Contributions
The applicant is made aware that as the Resource Consent 125124 for a residential 2 subdivision development has not yet applied for the 224c certificate of conditions Development Contributions are applicable. The contribution must be paid at the time of applying for a Code Compliance Certificate, or upon application of the 224c whichever comes first. A Code Compliance Certificate cannot be issued for this building project until the subdivision has been completed and all contributions paid.

Environment Canterbury (Canterbury Regional Council) Liquefaction hazard study
The applicant is made aware that the proposed project falls within an area of shading on the ECAN liquefaction study map, and the following will apply.
The shading on the ECAN map identifies areas where liquefaction assessment is needed and where a site specific geotechnical investigation and report is required as part of a Building Consent application.

A Geotechnical Investigation has been carried out on this site by Riley Consultants and supplied with the application – This will be reviewed as part of the building consent process.

Vehicle Crossing – Urban
This property has been identified as requiring a new vehicle crossing. **A formal Vehicle Crossing application will need to be submitted (along with a $61.30 processing fee) for approval and established prior to the erection of a dwelling or other significant building.** (Rule 3.2, Waimakariri District Council Vehicle Crossing Bylaw 2007). Note that a legal and compliant vehicle crossing will need to be established (in accordance with WDC Engineering Code of Practice **DWG 600-211** (Urban). Resource Consent approval **will** need to be sought if the location of the proposed vehicle crossing cannot be **located within 1m or greater than 7m** to the adjacent vehicle crossing (Waimakariri District Plan Rule 30.6.1.13). **Any person who begins work on a vehicle crossing without first**

Consent Issued RC170037

receiving a vehicle crossing permit from the Council commits an offence against this bylaw. (Rule 4.4 Waimakariri District Council Vehicle Crossing Bylaw 2007)

Penetrometer Test / Earth Fill
To date no 224c has been applied for; we are unable to determine if engineered fill has been carried out on this site.

As Built Service Plans
As no 224c application has yet been submitted for this subdivision; we have no information available in regards to Service As Built plans. It is the applicant's responsibility to locate all service laterals prior to commencing any building work.

Advice Note
As no 224 certificate has been issued to date the applicant is made aware that the construction of the proposed building on the proposed lot is being done entirely at the applicants' risk, as legal ownership of this parcel does not take effect until the 224c and title have been issued.

The approval plan along with any Development Contribution notification or Resource Consent Certificate (where applicable) attached to this Project Information Memorandum must be included with the Building Consent for the project (when issued). Any significant departure from the original plans may require that a new Project Information Memorandum be issued.

Yours faithfully

Debbie Wilson
PIMs Officer

Consent Issued BC170037

Project Information Memorandum

Sections 31-38, Building Act 2004

Application

Stonewood Homes (Christchurch) Franchisee Limited	No.	BC170037.01
PO Box 11036	Issue date	10 March 2017
Sockburn	Received date	19 January 2017
Christchurch 8443	Responsible Officer	Debbie Wilson

Project

Description	DWELLING WITH ATTACHED GARAGE KIPPENBERGER AVENUE RANGIORA PROPOSED LOT 40 DP 155398
Intended Life	Indefinite (50+)
Intended Use	Residential
Estimated Value	$210,845.46
Location	73 Kippenberger Avenue RANGIORA
Legal Description	LOT 500 DP 476332
Valuation No.	2165902368

This project information memorandum is confirmation that the proposed building work may be undertaken, subject to the provisions of the Building Act 2004, and any requirements of the building consent.

This project information memorandum includes:

___ Information identifying special features of the land concerned
___ Information about the land or building concerned notified to the Council by any statutory organisation having the power to classify land or buildings
___ Details of relevant utility systems
___ Details of authorisations which have been granted
___ Notification of any other authorisations which must be obtained before the proposed building work may be undertaken
___ Important information

All boundary survey pegs are to be located by discovery or redefinition and flagged before work is commenced.

A current copy of the certificate of title is to be submitted with the building consent application.

The certificate of title may make reference to land covenants - a copy of which should be submitted with the Building Consent application.

No part of the structure is to exceed the Councils recession plane.

Consent Issued BC170037

This project Information Memorandum does not purport to be a full report on every aspect of the property which is likely to be relevant to the building works proposed. It is information that is known to the Council at the date of the issue of this memorandum. It is issued pursuant to Sections 30-39 of the Building Act 2004.

INFORMATION IDENTIFYING RELEVANT SPECIAL FEATURES OF THE LAND
Wind Zone High
This building project is located approximately 26m above mean sea level. This AMSL is for snow loading purposes only, and not to be used as a datum for minimum floor levels or other design purposes.
Canterbury Snow Zone 4
Earthquake Zone 2
Comments:

Attachments:
Nil

INFORMATION ABOUT THE LAND OR BUILDINGS NOTIFIED TO THE COUNCIL BY ANY STATUTORY ORGANISATION HAVING THE POWER TO CLASSIFY LAND OR BUILDINGS
Environment Canterbury (Canterbury Regional Council)
Comments:
Environment Canterbury (Canterbury Regional Council) Liquefaction hazard study
The applicant is made aware that the proposed project falls within an area of shading on the ECAN liquefaction study map, and the following will apply.
The shading on the ECAN map identifies areas where liquefaction assessment is needed and where a site specific geotechnical investigation and report is required as part of a Building Consent application.
Attachments:
Nil

DETAILS OF RELEVANT UTILITY SYSTEMS (administered by the Waimakariri District Council)

Sewer

Is a connection to a public sewer scheme available?	Yes
If yes, which public sewer scheme?	Eastern District
Is the property already connected?	No

Comments:
Connect to the service lateral provided in compliance with conditions of the Resource Consent for this development.

Notes:
Sewer connections must be installed by registered drainlayers. It is the property owner's responsibility to arrange connections. New connections to sewer mains must be inspected and approved by the Council prior to backfilling.
A trench opening permit is required to open a footpath or street.
A Capital charge is payable where the property has not previously paid sewer rates.

Water

Is a connection to a public water supply available?	Yes
If yes, which public water supply?	Rangiora
Is the property already connected?	No

Comments:
Connect to the service lateral provided in compliance with conditions of the Resource Consent for this development.

Consent Issued RC170035

Notes:
Water connections to property boundaries are installed by the Council after the receipt of charges payable.
A capital charge is payable where the property has not previously paid water rates.

Stormwater

Is a connection to a public drainage system available?	Yes
Is the property already connected?	No
Discharge point: Kerb and Channel	

Comments:
Connect to the service lateral provided in compliance with conditions of the Resource Consent for this development.

Notes:
Stormwater connections must be installed by registered drainlayers. It is the property owner's responsibility to arrange connection. New connections to drainage systems must be inspected and approved by the Council prior to backfilling.
A trench opening permit is required if crossing a footpath.
A Capital charge is payable where the property has not previously paid urban drainage rates.

Attachments
"As Built" service plans – **NONE AVAILABLE TO DATE**

DETAILS OF AUTHORISATIONS THAT HAVE BEEN GRANTED
Resource Consent
Comments:
Resource Consent 125124 – 135 Lot residential 2 subdivision. Decision issued 08.07.13, 224c not issued to date.
Attachments:
A copy of the above noted resource consent can be viewed at or emailed from Waimakariri District Council if required.

DETAILS OF AUTHORISATIONS THAT MUST BE OBTAINED BEFORE BUILDING CAN COMMENCE:
Development Contributions
Environment Canterbury (Canterbury Regional Council)
Vehicle Crossing
Earth Fill
As built service plans
Comments:
Development Contributions
The applicant is made aware that as the Resource Consent 125124 for a residential 2 subdivision development has not yet applied for the 224c certificate of conditions Development Contributions are applicable. The contribution must be paid at the time of applying for a Code Compliance Certificate, or upon application of the 224c whichever comes first. A Code Compliance Certificate cannot be issued for this building project until the subdivision has been completed and all contributions paid.

Environment Canterbury (Canterbury Regional Council) Liquefaction hazard study
The applicant is made aware that the proposed project falls within an area of shading on the ECAN liquefaction study map, and the following will apply.
The shading on the ECAN map identifies areas where liquefaction assessment is needed and where a site specific geotechnical investigation and report is required as part of a Building Consent application.

A Geotechnical Investigation has been carried out on this site by Riley Consultants and supplied with the application – This will be reviewed as part of the building consent process.

Consent Issued RC170037

Vehicle Crossing – Urban
This property has been identified as requiring a new vehicle crossing. A formal Vehicle Crossing application will need to be submitted (along with a $61.30 processing fee) for approval and established prior to the erection of a dwelling or other significant building. (Rule 3.2, Waimakariri District Council Vehicle Crossing Bylaw 2007). Note that a legal and compliant vehicle crossing will need to be established (in accordance with WDC Engineering Code of Practice DWG 600-211 (Urban). Resource Consent approval will need to be sought if the location of the proposed vehicle crossing cannot be located within 1m or greater than 7m to the adjacent vehicle crossing (Waimakariri District Plan Rule 30.6.1.13). Any person who begins work on a vehicle crossing without first receiving a vehicle crossing permit from the Council commits an offence against this bylaw. (Rule 4.4 Waimakariri District Council Vehicle Crossing Bylaw 2007)

Earth Fill
To date no 224c has been applied for; we are unable to determine if engineered fill has been carried out on this site.

As Built Service Plans
As no 224c application has yet been submitted for this subdivision; we have no information available in regards to Service As Built plans. It is the applicant's responsibility to locate all service laterals prior to commencing any building work.
Attachments:
Vehicle Crossing application form

DETAILS OF VEHICLE CROSSING (ENTRANCEWAY), TYPE OF FRONTAGE AND TRENCH OPENING PERMIT

Vehicle Crossing (Entranceway)
Is formation of a vehicle crossing from road edge to property boundary required? Yes
Type of access required: DWG 600-211 (Urban).

Advice Notes

As no 224 certificate has been issued to date the applicant is made aware that the construction of the proposed building on the proposed lot is being done entirely at the applicants' risk, as legal ownership of this parcel does not take effect until the 224c and title have been issued.

This project information memorandum is confirmation that the proposed building work may be undertaken subject to the provisions of the Building Act 2004 and any requirements of the building consent **Not yet Approved**.

Signed for and on behalf of the Council:

Name: **Date: 10/03/2017**

Layout Template Version 15/06

Consent Issued BC170037

APPROVED PIM APPLICATION
Refer to PIM report for conditions of this application
BC170037
10/03/2017
debbiew

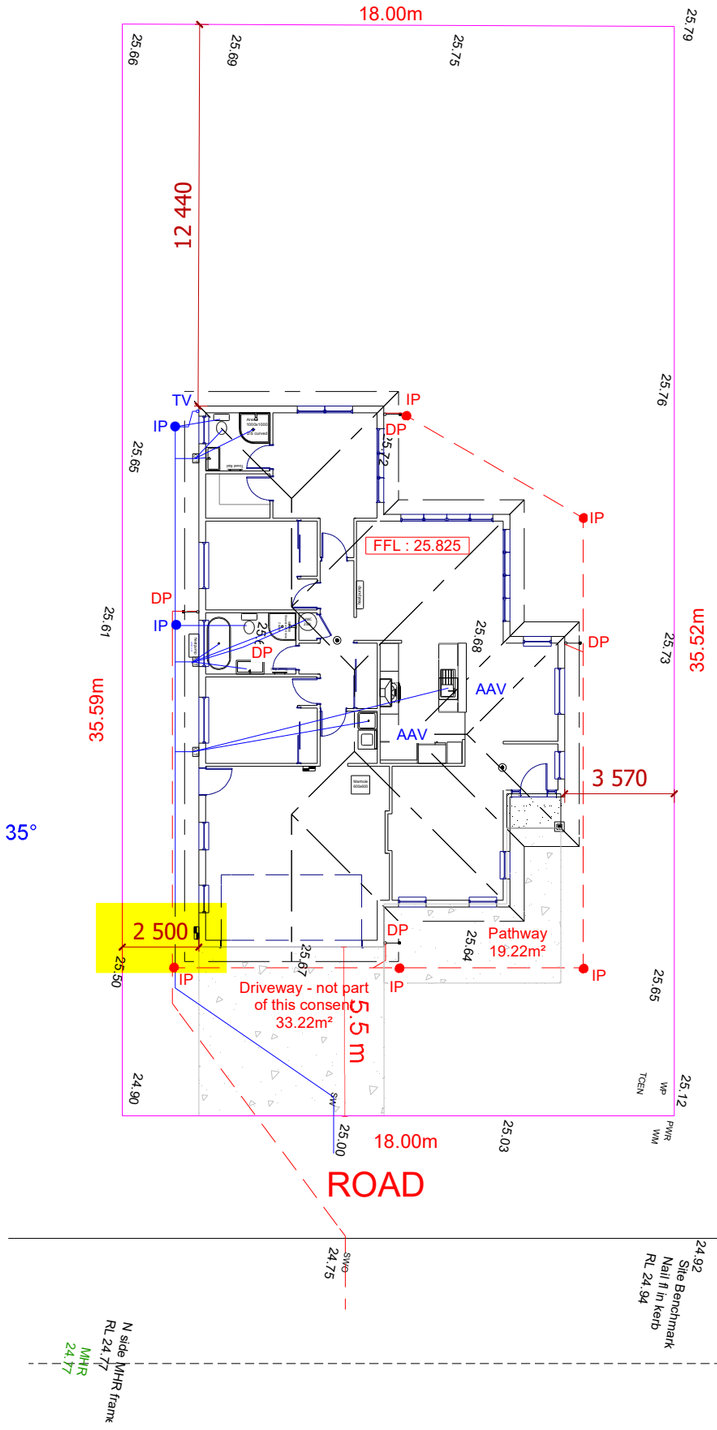

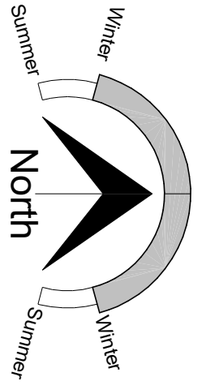

LEGEND	
LEGEND.	
Sewer Pipe	———
S/W Pipe	- - - - -
Down Pipe	DP
Gully Trap	GT
Terminal Vent	TV

SITE PLAN NOTES
Refer to Drainage Plan for specific drainage information
Refer to sediment control plan in specification and implement where required.
Driveway – By Stonewood Homes Ltd as shown OR Driveway and Sump not part of this building consent
Convey surface water from sealed drive areas to an appropriate approved outfall.
Dimensions are shown to cladding face
Resource Consent Issues: 1/ No RC Issues known

SITE INFORMATION	
Zone	A
Wind	High
Earthquake	2
Durability	C
Snow	As per truss design

BUILDING AREA AND SITE COVERAGE	
Net Site Area =	653m²
Building Area (O/V) =169.38m² (Includes covered areas)	
Actual Site Coverage=25.93%	

STONEWOOD HOMES

Stonewood Homes Ltd
10 Logistics Drive, P.O Box 11 036
Christchurch, New Zealand
Phone: +64 3 354 2344
Fax: +64 3 354 2342
Email: info@stonewood.co.nz
Website: www.stonewood.co.nz

Client :
Gemma Baldock
Proposed Dwelling at:
Lot 40
Elm Green
Rangiora

This plan is developed for the purchaser and is copyright to Stonewood Homes NZ Ltd.
All dimensions and levels are to be checked and verified on site by contractor prior to commencement of any work

Signed: | Date:

SITE PLAN

Drawn By	Checked By		LBP #
Isha	Jeremy Harrison		105491
Standard Plan	Print Date	Sales	Scale at A3
Core Fairhill 170 Hip	17/01/2017	GB	1:200
Job Number	Version	Revision	Sheet
153232	A	4	2 OF 15

Version:

CONSENT

C:\2016 files\G B Plans\Baldock 153232.layout

Layout Template Version 15/06

Key To Elevations

Building Consent 170037
Received 16/2/17

Consent Issued BC170037

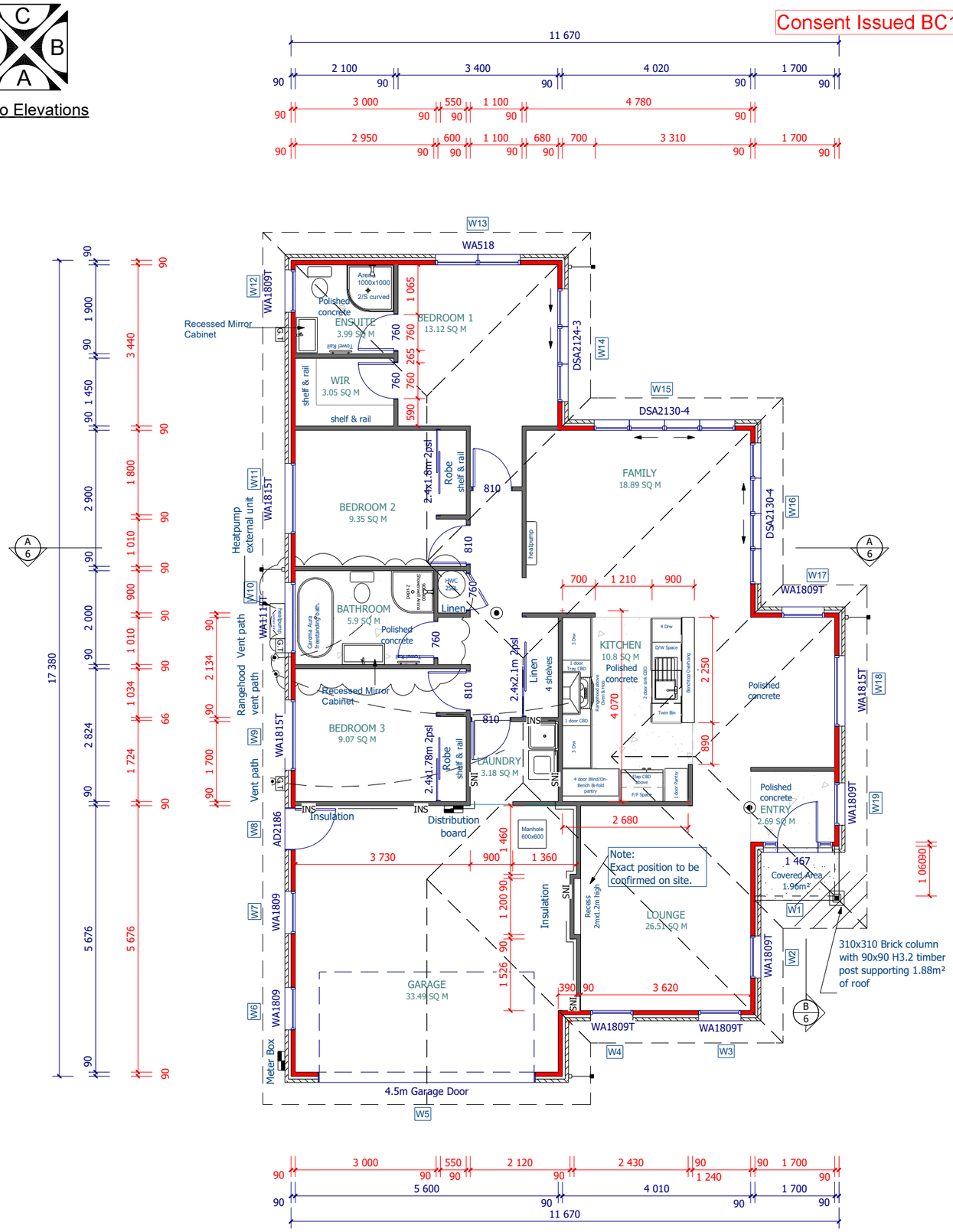

Note:
Wet Areas to have a 3 coat paint System

ROOF & WALL CLADDING

Roof -	25º Metalcraft Metal Pressed Tile Profile
Walls -	Big face Brick Canterbury Clay
	Bricks Heritage 70 Series160 Blocks
Feature -	CHH Shadowclad texture Groove

BUILDING AREA

AREA: 160.73 m² O/F (Perimeter: 58.10m)
AREA: 167.42 m² O/V (Perimeter: 59.14m)
AREA: 169.38 m² (incl Covered Area 1.96 m²)
AREA: 199.12 m² Roof(Perimeter: 62.90m)

Note:
Smoke detectors to be fitted with both a rest and hush button feature to comply with F7/AS1

DOOR SCHEDULE	
LABEL	QTY
2.4X1.78M 2PSL	1
2.4X2.1M 2PSL	1
4.5M GARAGE DOOR	1
810	4
760	4
AD2186	1
1 467	1
2.4X1.8M 2PSL	1

WINDOW SCHEDULE	
LABEL	QTY
WA1809T	6
WA1115T	1
DSA2130-4	2
DSA2124-3	1
WA1809	2
WA518	1
WA1815T	3

APPROVED PIM APPLICATION
Refer to PIM report for conditions of this application
BC170037
10/03/2017
debbiew

GENERAL FLOOR PLAN NOTES

SMOKE ALARMS
Smoke Alarms to be fitted within 3.0m of sleeping areas and on Escape routes, as indicated on plan. Refer to Construction Schedule (Page 2 & 3) in the Specification for more information.

MISCELLANEOUS:
Dimensions shown are to the frame,
GIB thickness not shown.
Refer to Construction Schedule (Page 2 & 3 of Specification) for additional construction information.
Entry through external doors
Mechanical ventilation
Air Seals to have PEF rod & low expansion foam
All windows and doors centered in room unless shown otherwise

FOUNDATION SYSTEM
Standard foundations as per NZS3604:2011 subject to final soil report.

WALL FRAMING -designed to high wind zone
Stud Height: 2420 mm
Exterior Walls: 90x45mm studs @ 600 mm crs
Interior Loadbearing wall:
90x45mm studs @ 600 mm crs
Dwangs Ext: 90x45 @ 800 crs
Non loadbearing: 90x45mm studs @ 600 mm crs
Dwangs Int: 90x45mm @ 1350mm crs max

LINTELS AND BEAMS
Lintels and beams can be found on the Truss Design

BUILDING WRAP
Watergate Building Wrap, refer to manufacturers specifications attached

DOORS
Internal Height: 1980mm
Type: (vertical V groove)
RVG5 MDF
Front Door: APL Axis Vertical Solid 860mm

INSULATION
Wall - Pink Batts Ultra R2.4 Wall Batts
Ceiling - Pink Batts R3.6 Ceiling Batts

WALL AND CEILING LININGS
Wall - Standard 10mm GIB (unless required for bracing)
Ceiling - Standard 13mm GIB
13mm GIB Aqualine (bathrooms)
Bathroom - 10mm GIB Aqualine
Corner Finish - Square

FLOOR FINISHES
Carpet, Tiles

INTERIOR AND EXTERIOR JOINERY
Joinery - Double Glazed Vantage
Standard Aluminium Joinery
Interior - Shelf and rail to wardrobes
Wardrobe Mirrors

WATER HEATING
Electric Hot water system

KITCHEN COOKTOP
Electric Hobb

ROOF CLADDING AND STRUCTURE
Metal Tile - Battens: 50x40 SG6 H1.2 @ 370crs (Fixing

GUTTER/FASCIA/DOWNPIPES/SOFFITS
Gutter - Metalcraft Metalline Quad Gutter
Fascia - Metalcraft Metalline 185 Fascia
Downpipes - Metal 75x55mm
Soffits - Hardiflex 4.5mm

STONEWOOD HOMES

Stonewood Homes Ltd
10 Logistics Drive, P.O Box 11 036
Christchurch, New Zealand
Phone: +64 3 354 2344
Fax: +64 3 354 2342
Email: info@stonewood.co.nz
Website: www.stonewood.co.nz

Client :
G Baldock
Proposed Dwelling at:
Lot 40
Elm Green
Rangiora

This plan is developed for the purchaser and is copyright to Stonewood Homes NZ Ltd.
All dimensions and levels are to be checked and verified on site by contractor prior to commencement of any work

Signed: Date:

FLOOR PLAN

Drawn By	Checked By		LBP #
Isha	Jeremy Harrison		105491
Standard Plan	Print Date	Sales	Scale at A3
Core Fairhill 170 Hip	15/02/2017	GB	1:100
Job Number	Version	Revision	Sheet
153232	A	4	3

Version: CONSENT

OF 15

C:\2016 files\G B Plans\Baldock 153232.layout

Layout Template Version 15/06

RISK MATRIX ASSESSMENT		
ELEVATION A		
RISK CRITERIA	RISK	SCORE
Wind Zone	High	1
Number of Stories	Low	0
Roof Wall Junction	Low	0
Eaves Width	Low	0
Building Envelope	High	3
Decks & Balconies	Low	0
Total		4

Building Consent 170037
Received 16/2/17

Consent Issued BC170037

APPROVED PIM APPLICATION
Refer to PIM report for conditions of this application
BC170037
10/03/2017
debbiew

GENERAL ELEVATION NOTES
Air Barrier to unlined wall and gables, refer to the Construction Schedule in the Specification for type. This sheet to be read in conjunction with the Risk Matrix in specification. Driveway to fall from 20mm max below garage rebates (By Others). Key SS: Security Stay SG: Safety Glass

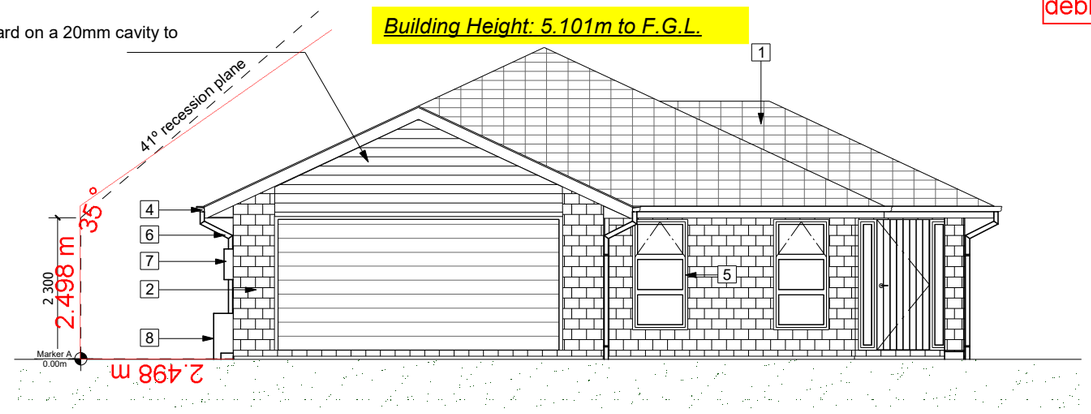

A 3 **ELEVATION A**
1:100

LEGEND
1 - Metalcraft Metal Pressed Tile Profile over roof underlay
2 - Big face Brick Canterbury Clay Bricks Heritage 70 Series160 Blocks over 60mm cavity
4 - Metalcraft Fascia and Gutter System
5 - Aluminum Joinery
6 - Colorsteel Downpipe's
7 - Meter Box
8 - Outdoor Heatpump Unit
9 - Terminal Vent

B 3 **ELEVATION B**
1:100

RISK MATRIX ASSESSMENT		
ELEVATION B		
RISK CRITERIA	RISK	SCORE
Wind Zone	High	1
Number of Stories	Low	0
Roof Wall Junction	Low	0
Eaves Width	Low	0
Building Envelope	Low	0
Decks & Balconies	Low	0
Total		1

C:\2016 files\G B Plans\Baldock 153232.layout

STONEWOOD HOMES

Stonewood Homes Ltd
10 Logistics Drive, P.O Box 11 036
Christchurch, New Zealand
Phone: +64 3 354 2344
Fax: +64 3 354 2342
Email: info@stonewood.co.nz
Website: www.stonewood.co.nz

Client :
G Baldock
Proposed Dwelling at:
Lot 40
Elm Green
Rangiora

This plan is developed for the purchaser and is copyright to Stonewood Homes NZ Ltd.
All dimensions and levels are to be checked and verified on site by contractor prior to commencement of any work

Signed: | Date:

ELEVATIONS

Drawn By	Checked By		LBP #
Isha	Jeremy Harrison		105491
Standard Plan	Print Date	Sales	Scale at A3
Core Fairhill 170 Hip	15/02/2017	GB	1:100
Job Number	Version	Revision	Sheet
153232	A	4	4
			OF 15

Version:
CONSENT

Layout Template Version 15/06

RISK MATRIX ASSESSMENT		
ELEVATION C		
RISK CRITERIA	RISK	SCORE
Wind Zone	High	1
Number of Stories	Low	0
Roof Wall Junction	Low	0
Eaves Width	Low	0
Building Envelope	Low	0
Decks & Balconies	Low	0
Total		1

Consent Issued BC170037

APPROVED PIM APPLICATION
Refer to PIM report for conditions of this application
BC170037
10/03/2017
debbiew

C/3 **ELEVATION C**
1:100

D/3 **ELEVATION D**
1:100

GENERAL ELEVATION NOTES
Air Barrier to unlined wall and gables, refer to the Construction Schedule in the Specification for type. This sheet to be read in conjunction with the Risk Matrix in specification. Driveway to fall from 20mm max below garage rebates (By Others). Key SS: Security Stay SG: Safety Glass

LEGEND
1 - Metalcraft Metal Pressed Tile Profile over roof underlay
2 - Big face Brick Canterbury Clay Bricks Heritage 70 Series160 Blocks over 60mm cavity
4 - Metalcraft Fascia and Gutter System
5 - Aluminum Joinery
6 - Colorsteel Downpipe's
7 - Meter Box
8 - Outdoor Heatpump Unit
9 - Terminal Vent

RISK MATRIX ASSESSMENT		
ELEVATION D		
RISK CRITERIA	RISK	SCORE
Wind Zone	High	1
Number of Stories	Low	0
Roof Wall Junction	Low	0
Eaves Width	Low	0
Building Envelope	Low	0
Decks & Balconies	Low	0
Total		1

C:\2016 files\G B Plans\Baldock 153232.layout

STONEWOOD HOMES

Stonewood Homes Ltd
10 Logistics Drive, P.O Box 11 036
Christchurch, New Zealand
Phone: +64 3 354 2344
Fax: +64 3 354 2342
Email: info@stonewood.co.nz
Website: www.stonewood.co.nz

Client :
Gemma Baldock
Proposed Dwelling at:
Lot 40
Elm Green
Rangiora

This plan is developed for the purchaser and is copyright to Stonewood Homes NZ Ltd.
All dimensions and levels are to be checked and verified on site by contractor prior to commencement of any work

Signed:	Date:		
ELEVATIONS			
Drawn By	Checked By		LBP #
Isha	**Jeremy Harrison**		**105491**
Standard Plan	Print Date	Sales	Scale at A3
Core Fairhill 170 Hip	**17/01/2017**	**GB**	1:100
Job Number	Version	Revision	Sheet
153232	**A**	**4**	**5**
Version:			OF
CONSENT			**15**

Consent Issued BC170037

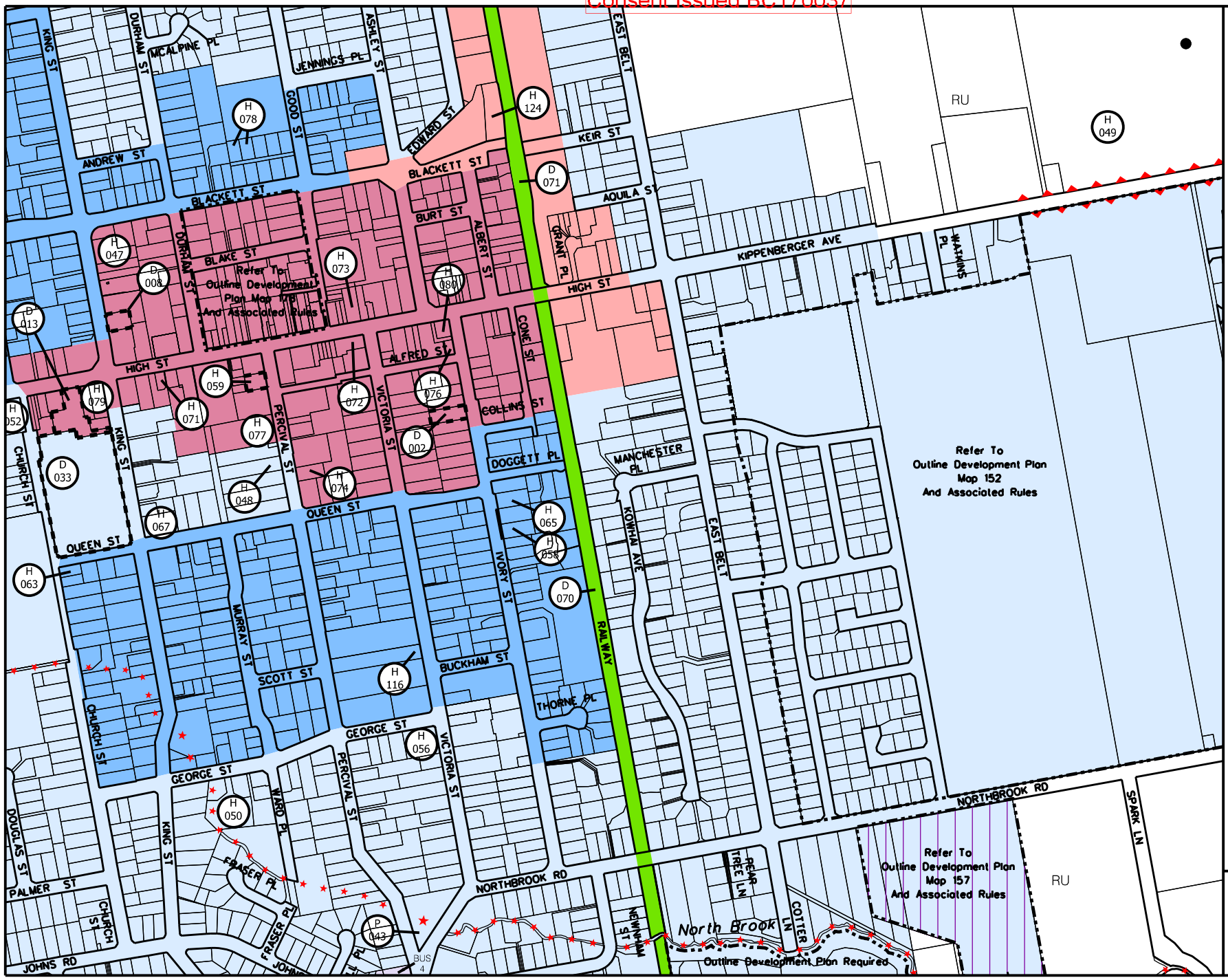

WAIMAKARIRI
DISTRICT COUNCIL

NOTE:
Disclaimer - refer to map legend sheet

Metres
0 60 120 180
Scale 1:7,500 (A4)

110	111	35
112	113	114
116	117	47

Rangiora

113

Cadastral Data from LINZ's DCDB. Crown Copyright Reserved

07/10/2015

Consent Issued BC170037

URBAN LEGEND (Sheets 77 to 133)

- Zone Business 1
- Zone Business 2
- Zone Business 3
- Zone Business 4
- Zone Business 5
- Zone Business 6
- Zone Residential 1
- Zone Residential 2
- Zone Residential 3
- Zone Residential 4A
- Zone Residential 4B
- Zone Residential 5
- Zone Residential 6
- Zone Residential 6A
- Zone Residential 7

- RU — Zone Rural
- Zone Mapleham Rural 4B
- Subdivision Constraint Rural
- Subdivision Constraint Area (Policy 18.1.1.8)
- Pegasus Rural Zone See Map 142
- Localised Flooding Area
- Goat control area

LURP (Land Use Recovery Plan)

LURP Priority Areas - Business

- Zoned
- Not Yet Zoned

LURP Priority Areas - Residential

- Zoned
- Not Yet Zoned

- D 001 — Designations
- H 049 — Heritage Sites
- V 049 — Vegetation and Habitat Sites
- P 071 — Notable Plant Sites
- A 001 — Archaeological Sites
- WT 00 — Waahi Tapu / Waahi Taonga

NOTE: These notations do not necessarily indicate the precise position of the Site, nor relate to the size of any Site.

NOTE: See Rule 23.1.1.17 for goat control (includes Outstanding Landscape areas)

- River Reaches subject to esplanade provisions
- Limited Access Road
- Road to be Closed
- Outline Development Plan Required Boundary
- Coastal Marine Area boundary
- Average Noise Exposure Contours; Christchurch International Airport
- 50 — Noise Level in dBA Ldn
- Transit New Zealand Designation
- Tranz Rail Designation
- Transpower High Voltage Lines
- Waimakariri District boundary
- Projected Infrastructure Boundary

NOTE:
The planning maps are produced in colour and are intended to provide accurate and adequate information as at the date of publication and at the scale at which they are published. The Waimakariri District Council will not accept liability to any person or entity arising out of any reliance in part or full, by such person or entity upon any of the contents of the planning maps for any purpose in circumstances where they are reproduced in a way that alters the scale, and / or colour or any other detail of the maps, and the information contained therein.

20/04/2015

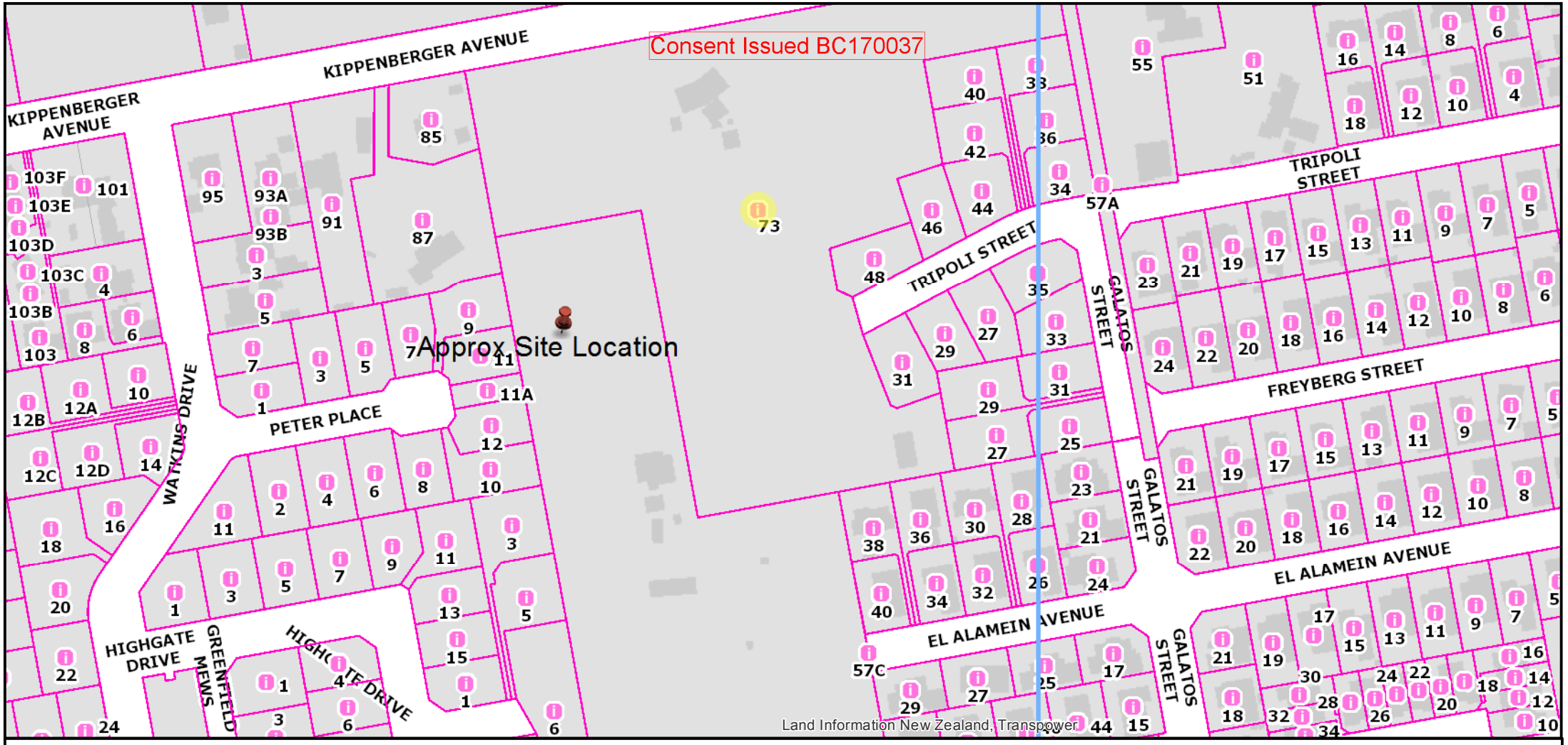

Legend

- Transmission Lines
- Properties < 1 ha
- Properties > 1 ha
- Legal Description Rural
- Approved to Survey Land Parcels
- Property Boundaries
- Deposited Land Parcels

N

WAIMAKARIRI DISTRICT COUNCIL

73 Kippenberger Avenue, Rangiora Proposed Lot 40 of RC125124

Date: 10/03/2017

Author: WAIMAP

0 25 50 75 100

Meters

Scale @ A4 - 1:2257

DISCLAIMER:
Information on this map may not be used for the purposes of any legal disputes.
Boundary information is derived under licence from LINZ Digital Cadastral Database (Crown Copyright Reserved) for re-use under licence. Land and property information is based on/includes LINZ's data which is licensed by Land Information New Zealand (LINZ) for re-use under the Creative Commons Attribution 3.0 New Zealand licence.
The location of Council services are shown indicatively only and no guarantee is given as to the accuracy of the information. The user of the information has the responsibility confirm the exact location of the service prior to commencing any construction including potholing and protecting existing services. Contractors will be held responsible for all damage to Council property. The Council does not guarantee the existence of service laterals to vacant lots, regardless of whether a lateral is shown or not. The Waimakariri District Council does not give and expressly disclaims any warranty as to the accuracy or completeness of the information or its fitness for any purpose.
Flood information on this map is based on modelling outputs and the accuracy of this data is limited by the assumptions used in the model. The Council reserves the right to update this information and cannot guarantee that the information is accurate and up to date at all times. An experienced practitioner should be consulted if this information is to be used for Building or Development purposes. Please refer to the District Plan and the Council's Planning Unit if you wish to use this information for planning purposes. Anyone who acts on any of this information does so at their own risk.

Map Created by WAIMAP Utilities at 11:49:33 a.m.

Legend

- Transmission Lines
- Properties < 1 ha
- Properties > 1 ha
- Legal Description Rural
- Approved to Survey Land Parcels
- Property Boundaries
- Deposited Land Parcels

N

WAIMAKARIRI DISTRICT COUNCIL

73 Kippenberger Avenue, Rangiora Proposed Lot 40 of RC125124

Date: 10/03/2017

Author: WAIMAP

0 10 20 30 40

Meters

Scale @ A4 - 1:1128

DISCLAIMER:
Information on this map may not be used for the purposes of any legal disputes.
Boundary information is derived under licence from LINZ Digital Cadastral Database (Crown Copyright Reserved) for re-use under licence. Land and property information is based on/includes LINZ's data which is licensed by Land Information New Zealand (LINZ) for re-use under the Creative Commons Attribution 3.0 New Zealand licence.
The location of Council services are shown indicatively only and no guarantee is given as to the accuracy of the information. The user of the information has the responsibility confirm the exact location of the service prior to commencing any construction including potholing and protecting existing services. Contractors will be held responsible for all damage to Council property. The Council does not guarantee the existence of service laterals to vacant lots, regardless of whether a lateral is shown or not. The Waimakariri District Council does not give and expressly disclaims any warranty as to the accuracy or completeness of the information or its fitness for any purpose.
Flood information on this map is based on modelling outputs and the accuracy of this data is limited by the assumptions used in the model. The Council reserves the right to update this information and cannot guarantee that the information is accurate and up to date at all times. An experienced practitioner should be consulted if this information is to be used for Building or Development purposes. Please refer to the District Plan and the Council's Planning Unit if you wish to use this information for planning purposes. Anyone who acts on any of this information does so at their own risk.

Map Created by WAIMAP Utilities at 11:48:42 a.m.

Form 2A

Memorandum from licensed building practitioner: Certificate of design work

Section 45 and Section 30C, Building Act 2004

Please fill in the form as fully and correctly as possible.

If there is insufficient room on the form for requested details, please continue on another sheet and attach the additional sheet(s) to this form.

THE BUILDING SITE

Lot 40
Elm Green
Rangiora

THE OWNER

G. Baldock	
Mailing address: 10 Freyberg St	
Suburb:	PO Box/Private Bag:
Town/City: Rangiora	Postcode:
Phone number: 0274048077	Email address: gemma.baldock@stonewood.co.nz

BASIS FOR PROVIDING THIS MEMORANDUM

I am providing this memorandum in my role as the: Please tick the option that applies (√)	
( )	**sole** designer of all of the RBW design outlined in this memorandum – I carried out all of the RBW design myself – no other person will be providing any additional memoranda for the project
(√)	**lead** designer who carried out some of the RBW design myself but also supervised other designers – this memorandum covers their RBW design work as well as mine, and no other person will be providing any additional memoranda for the project
( )	**lead** designer for all but specific elements of RBW – this memorandum only covers the RBW design work that I carried out or supervised and the other designers will provide their own memoranda relating to their specific RBW design
( )	**specialist** designer who carried out specific elements of RBW design work as outlined in this memorandum – other designers will be providing a memorandum covering the remaining RBW design work

IDENTIFICATION OF DESIGN WORK THAT IS RESTRICTED BUILDING WORK (RBW)

I _____**Jeremy Harrison**_____ carried out / supervised the following design work that is restricted building work

PRIMARY STRUCTURE: B1

Design work that is restricted building work	***Description***	***Carried out/ supervised***	***Reference to plans and specifications***
Tick(√)if included *Cross (X) if excluded*	*[If appropriate, provide details of the restricted building work]*	*[Specify whether you carried out this design work or supervised*	*[If appropriate, specify references]*

		someone else carrying out this design work]	

Primary structure

All RBW Design work relating to B1	(√)		( ) Carried out (√) Supervised	
Foundations and subfloor framing	(√)		( ) Carried out (√) Supervised	
Walls	(√)		( ) Carried out (√) Supervised	
Roof	(√)		( ) Carried out (√) Supervised	
Columns and beams	(√)		( ) Carried out (√) Supervised	
Bracing	(√)		( ) Carried out (√) Supervised	
Other	( )	*N/A*	( ) Carried out ( ) Supervised	

EXTERNAL MOISTURE MANAGEMENT SYSTEMS: E2

All RBW design work relating to E2	(√)		( ) Carried out (√) Supervised	
Damp proofing	(√)		( ) Carried out (√) Supervised	
Roof cladding or roof cladding system	(√)		( ) Carried out (√) Supervised	
Ventilation system (for example, subfloor or cavity)	(√)		( ) Carried out (√) Supervised	
Wall cladding or wall cladding system	(√)		( ) Carried out (√) Supervised	
Waterproofing	(√)		( ) Carried out (√) Supervised	
Other	( )	*N/A*	( ) Carried out ( ) Supervised	

FIRE SAFETY SYSTEMS: C1 – C6

Emergency warning systems, evacuation and fire service operation systems, suppression or control systems, or other	( )		( ) Carried out ( ) Supervised	

Note: The design of fire safety systems is only restricted building work when it involves small-to-medium apartment buildings as defined by the Building (Definition of Restricted Building Work) Order 2011.

Note: continue on another page if necessary.

WAIVERS AND MODIFICATIONS

Waivers or modifications of the building code are required	( )	Yes	(√)	No

If Yes, provide details of the waivers or modifications below:

Clause	Waiver/modification required
[List relevant clause numbers of building code]	*[Specify nature of waiver or modification of building code]*
	N/A

Note: continue on another page if necessary.

ISSUED BY

Name: **Jeremy Harrison**	LBP or Registration number: **105491**
The practitioner is a: (√) Design LBP ( ) Registered architect ( ) Chartered professional engineer	
Design Entity or Company (optional):	
Mailing address (if different from below):	
Street address / Registered office: **12 Murfitt St**	
Suburb:	Town/City: **Pegasus**
PO Box/Private Bag:	Postcode: **7612**
Phone number:	Mobile: **0277715816**
After Hours:	Fax:
Email address: **harrisonjerm@gmail.com**	Website:

DECLARATION

I **Jeremy Harrison** [*name of practitioner*] , LBP,

state that I have applied the skill and care reasonably required of a competent design professional in carrying out or supervising the Restricted Building Work (RBW) described in this form, and that based on this, I also state that the RBW:

- Complies with the building code; or
- Complies with the building code subject to any waiver or modification of the building code recorded on this form.

Signature:

Date: **16/1/16**

Consent Issued BC170037

Building Consent 170037
Received 20/2/17

Memorandum from licensed building practitioner: Certificate of design work

Section 45 and section 30C, Building Act 2004

Please fill in the form as fully and correctly as possible.

If there is insufficient room on the form for requested details, please continue on another sheet and attach the additional sheet(s) to this form.

THE BUILDING	
Street address: Lot 37 & 40 Elm Green	
Suburb: Rangiora	
Town/City:	Postcode:

THE OWNER(S)		
Name(s): Stonewood Homes (Chch) Francisee		
Mailing address: 10 Logistics Drive, Harewood		
Suburb:	PO Box/Private Bag:	
Town/City: Christchurch		Postcode: 8051
Phone number: 03 354 2344	Email address:	

Consent Issued BC170037

Building Consent 170037
Received 20/2/17

BASIS FOR PROVIDING THIS MEMORANDUM

I am providing this memorandum in my role as the: Please tick the option that applies ✓

○	**sole** designer of all of the RBW design outlined in this memorandum – I carried out all of the RBW design work myself – no other person will be providing any additional memoranda for the project
○	**lead** designer who carried out some of the RBW design myself but also supervised other designers – this memorandum covers their RBW design work as well as mine, and **no other** person will be providing any additional memoranda for the project
○	**lead** designer for all but specific elements of RBW – this memorandum only covers the RBW design work that I carried out or supervised and the **other** designers will provide their own memorandum relating to their specific RBW design
◉	**specialist** designer who carried out specific elements of RBW design work as outlined in this memorandum – other designers will be providing a memorandum covering the remaining RBW design work

IDENTIFICATION OF DESIGN WORK THAT IS RESTRICTED BUILDING WORK (RBW)

I ROHAN LESLIE POLLARD carried out / supervised the following design work that is restricted building work

PRIMARY STRUCTURE: B1

Design work that is RBW	Description of RBW	Carried out or supervised	Reference to plans and specifications
Tick ✓ if included. Cross ✗ if excluded	If appropriate, provide details of the RBW	Tick ✓ whether you carried out this design work or supervised someone else carrying out this design work	If appropriate, specify references
All RBW design work relating to B1 ✗		○ Carried out ○ Supervised	
Foundations and subfloor framing ✓	Enhanced NZS3604:2011 Strip Footing Pad Footing Design	○ Carried out ◉ Supervised	Blueprint Structural Design Calcs REF:SC153232D40-1.1 & Structural and Architectural Drawings Listed on PS1 Addendum REF SC153232D81-1.1 for Lot 37 & 40 Elm Green, Rangiora

Consent Issued BC170037

Building Consent 170037
Received 20/2/17

Design work that is RBW	Description of RBW	Carried out or supervised	Reference to plans and specifications
Tick ✓ if included. Cross ✗ if excluded	If appropriate, provide details of the RBW	Tick ✓ whether you carried out this design work or supervised someone else carrying out this design work	If appropriate, specify references
Walls ✗		◯ Carried out ◯ Supervised	
Roof ✗		◯ Carried out ◯ Supervised	
Columns and beams ✗		◯ Carried out ◯ Supervised	
Other ✗		◯ Carried out ◯ Supervised	
EXTERNAL MOISTURE MANAGEMENT SYSTEMS: E2			
All RBW design work relating to E2 ✗		◯ Carried out ◯ Supervised	
Damp proofing ✗		◯ Carried out ◯ Supervised	
Roof cladding or roof cladding system ✗		◯ Carried out ◯ Supervised	

Consent Issued BC170037

Building Consent 170037
Received 20/2/17

Design work that is RBW	Description of RBW	Carried out or supervised	Reference to plans and specifications
Tick ✓ if included. Cross ✗ if excluded	If appropriate, provide details of the RBW	Tick ✓ whether you carried out this design work or supervised someone else carrying out this design work	If appropriate, specify references
Ventilation system (for example, subfloor or cavity) ✗		◯ Carried out ◯ Supervised	
Wall cladding or wall cladding system ✗		◯ Carried out ◯ Supervised	
Waterproofing ✗		◯ Carried out ◯ Supervised	
Other ✗		◯ Carried out ◯ Supervised	
FIRE SAFETY SYSTEMS: C1 - C6			
Emergency warning systems Evacuation and fire service operation systems ✗ Suppression or control systems Other		◯ Carried out ◯ Supervised	

Note: The design of fire safety systems is only restricted building work when it involves small-to-medium apartment buildings as defined by the Building (Definition of Restricted Building Work) Order 2011.

Consent Issued BC170037

Building Consent 170037
Received 20/2/17

WAIVERS AND MODIFICATIONS

Waivers or modifications of the Building Code are required. ◯ Yes ◉ No

If Yes, provide details of the waivers or modifications below:

Clause	Waiver/modification required
List relevant clause numbers of building code	Specify nature of waiver or modification of building code required

Consent Issued BC170037

Building Consent 170037
Received 20/2/17

ISSUED BY

Name and contact details of the licensed building practitioner who is licensed to carry out or supervise design work that is restricted building work.

Name: ROHAN LESLIE POLLARD	LBP or Registration number: 228756
The practitioner is a: ○ Design LBP ○ Registered architect ● Chartered professional engineer	
Design Entity or Company (optional): BLUEPRINT CONSULTING ENGINEERS	
Mailing address (if different from below):	
Street address/Registered office: 127a PLUNKET AVENUE	
Suburb: MANUKAU	Town/City: AUCKLAND
PO Box/Private Bag: PO BOX 97607	Postcode: 2241
Phone number: 09 294 8993	Mobile: 0274 77 22 65
After hours:	Fax: 09 294 8926
Email address: rpollard@bce.nz	Website: www.bce.nz

DECLARATION

I ROHAN LESLIE POLLARD LBP, state that I have applied the skill and care reasonably required of a competent design professional in carrying out or supervising the Restricted Building Work (RBW) described in this form, and that based on this, I also state that the RBW:

- Complies with the building code, or
- ~~Complies with the building code subject to any waiver or modification of the building code recorded on this form~~

Signature:

Date: 17 February 2017

Consent Issued BC170037

SECTION 2

Geotech, Engineer Reports & Conditions PS1 & 2

- Calculations
- A4 Details

Consent Issued BC170037

BC170037

RILEY CONSULTANTS

WAIMAKARIRI DISTRICT COUNCIL
Plans and specifications APPROVED in accordance with the Building Act 2004, clause 49 and the Building Regulations 1992, Clause 3
170037 13/03/2017 petert

GEOTECHNICAL REPORT FOR BUILDING CONSENT

LOT 40, ELM GREEN SUBDIVISION, RANGIORA

Engineers and Geologists

RILEY CONSULTANTS LTD
New Zealand
Email: riley@riley.co.nz
Email: rileychch@riley.co.nz
Web: www.riley.co.nz

AUCKLAND
4 Fred Thomas Drive, Takapuna, Auckland 0622
PO Box 100253, North Shore, Auckland 0745
Tel: +64 9 489 7872 Fax: +64 9 489 7873

CHRISTCHURCH
393 Madras Street, Christchurch 8013
PO Box 4355, Christchurch 8140
Tel: +64 3 379 4402 Fax: +64 3 379 4403

Consent Issued BC170037

BC170037

RILEY CONSULTANTS

GEOTECHNICAL REPORT FOR BUILDING CONSENT
LOT 40, ELM GREEN SUBDIVISION, RANGIORA

WAIMAKARIRI DISTRICT COUNCIL
Plans and specifications APPROVED in accordance with the Building Act 2004, clause 49 and the Building Regulations 1992, Clause 3
170037 13/03/2017 petert

Report prepared for: Freeman Homes Ltd

Report prepared by: Chloe Cameron, Engineering Geologist

Report reviewed by: Leah King, Senior Engineering Geologist

Report approved for release by: Don Tate, Director, CPEng

Report reference: 09816/4-L40

Date: 25 November 2016

Copies to: Freeman Homes Ltd 1 copy

Riley Consultants Ltd 1 copy

Issue:	Details:	Date:
1.0	Geotechnical Report for Building Consent	25 November 2016

Consent Issued BC170037

WAIMAKARIRI DISTRICT COUNCIL
Plans and specifications APPROVED in accordance with the Building Act 2004, clause 49 and the Building Regulations 1992, Clause 3
170037 13/03/2017 petert

Contents

1.0 Introduction 1
2.0 Council Requirements 2
3.0 Ground Conditions 2
4.0 Suitability of Ground (NZS 3604:2011) 2
5.0 Foundation Options 3
6.0 Earthworks 3
7.0 Conclusions 3
8.0 Limitation 3
9.0 References 4

Appendices

Appendix A: Hand auger and Scala penetrometer test results
Appendix B: Site Location Plan RILEY Dwg: 09816/4-L40

RILEY CONSULTANTS LTD
New Zealand
Email: riley@riley.co.nz
Email: rileychch@riley.co.nz
Web: www.riley.co.nz

AUCKLAND
4 Fred Thomas Drive, Takapuna, Auckland 0622
PO Box 100253, North Shore, Auckland 0745
Tel: +64 9 489 7872 Fax: +64 9 489 7873

CHRISTCHURCH
395 Madras Street, Christchurch 8013
PO Box 4355, Christchurch 8140
Tel: +64 3 379 4402 Fax: +64 3 379 4403

Consent Issued BC170037

BC170037

WAIMAKARIRI DISTRICT COUNCIL
Plans and specifications APPROVED in accordance with the Building Act 2004, clause 49 and the Building Regulations 1992, Clause 3
170037 13/03/2017 petert

GEOTECHNICAL REPORT FOR BUILDING CONSENT
LOT 40, ELM GREEN SUBDIVISION, RANGIORA

1.0 Introduction

Riley Consultants Ltd (RILEY) has been engaged to undertake a geotechnical investigation for Lot 40 of the Elm Green subdivision as per our letter dated 4 August 2016 (RILEY Ref: 09816/3-D).

It is understood that this report will be used in support of application for a building consent for the proposed dwelling to Waimakariri District Council.

The scope of this report excludes considerations of regional geology or seismic hazards associated with the site, in particular liquefaction. These aspects have been covered in the previous RILEY geotechnical investigation report at the subdivision consent stage, specifically:

- Geotechnical Investigation For Proposed Subdivision 83 Kippenberger Ave, Rangiora – Preliminary Conclusions (RILEY Ref: 09816-A, dated 6 December 2011)

In summary, the above geotechnical investigation report presents a geotechnical overview of Elm Green Subdivision, classifying liquefaction potential as being equivalent to Technical Category 1 (TC1), as defined in the Ministry of Business, Innovation and Employment (MBIE) Guidelines. The report also defines three distinct geotechnical zones within the subdivision, these are as follows:

- **Zone 1**. Located in the north of the subdivision and is considered to meet the requirements of NZS 3604 for "good ground". Standard foundation solutions are recommended within this zone.
- **Zone 2**. Located immediately south of Zone 1 and is not considered to meet the requirements of NZS 3604 for good ground". Appropriate options for development on the site will require either a specifically engineered raft foundation, or standard NZS 3604 foundation options constructed on improved ground to satisfy criteria for NZS 3604 "good ground".
- **Zone 3**. Located in the south of the subdivision comprising the most challenging soils conditions on the site, with significant thickness of peat and soft compressible soils near the ground surface. Appropriate options for development on the site will require a specifically engineered raft foundation in combination with engineered ground treatment.

Lot 40 is situated within Zone 1.

RILEY understands that no extensive earthworks or ground treatments have been undertaken within Zone 1 of the subdivision as part of its development.

2.0 Council Requirements

For new subdivided land that fits the characteristics of TC1, the MBIE Guidelines require as a minimum, shallow investigation to be carried out at each house site (similar to normal NZS 3604 type investigation).

Shallow soil investigations are required to determine the suitability and bearing capacity of the soils for residential house foundations. As a minimum, four test locations per house site are required (refer Section 16.8, Part D of the MBIE Guidelines).

3.0 Ground Conditions

Subsurface investigations on Lot 40 were completed by RILEY staff on 02 November 2016; refer to the site plan RILEY Dwg: 09816/4-L40, for test locations. The ground investigation comprised of two shallow hand auger boreholes (HA401 and HA402), to a target depth of 2m depth, and two additional Scala penetrometer tests (SC401 and SC402) to 2m depth. The purpose of the boreholes was to confirm site geology, assess the near surface soil strengths, and to assess the depth to groundwater.

The ground conditions in the boreholes were reasonably consistent and comprised filll to between 0.4m and 0.6m depth, underlain by stiff silt with some sand to 0.7m and 0.8m depth, underlain by interbedded soft to stiff sandy silt and medium dense silty sand to 1.8m depth. A medium dense sand layer was present in HA402 from 1.8m to 2m depth.

No groundwater was encountered.

The ground investigation was undertaken in general accordance with the NZGS Guidelines (2005). All investigations were logged on-site by a RILEY staff member.

The hand auger logs and Scala penetrometer test results are appended.

4.0 Suitability of Ground (NZS 3604:2011)

NZS 3604:2011 defines the criteria for “good ground” as that which has an ultimate bearing capacity of 300kPa, and excludes:

WAIMAKARIRI DISTRICT COUNCIL
Plans and specifications APPROVED in accordance with the Building Act 2004, clause 49 and the Building Regulations 1992, Clause 3
170037 13/03/2017 petert

- Expansive soils.
- Potentially compressible ground.
- Ground which could foreseeably experience movement of 25mm or greater for any reason.

MBIE has included liquefiable soils in the ground conditions for which NZS 3604:2011 is not applicable. This aspect has been covered in the existing reports previously submitted to Waimakariri District Council (refer Section 1).

The results of the soil strength tests indicate that a geotechnical ultimate bearing capacity of 300kPa is variable and not consistently available across the site, and therefore the site does not satisfy the criteria for “good ground”. However, tests indicate that a geotechnical ultimate bearing capacity of 200kPa is consistently available across the site below the fill, from between 0.4m and 0.6m depth.

5.0 Foundation Options

Given the soil strengths encountered indicate 300kPa is not consistently available across the site, and the criterion for "good ground" has not been satisfied, a TC2 type foundation is recommended. Specifically a TC2 Option 1 to 4 enhanced concrete foundation (Type C) or a TC2 timber floor foundation (Type A or B), is suitable. A TC2 foundation requires 200kPa, which is consistently available at the site below the fill at between 0.4m and 0.6m depth. Reference to Section 5.3.1 and 5.3.2 of the MBIE Guidance document can be made.

Alternatively, a foundation which is specifically designed for the ground conditions encountered at the site, such as widening the foundation footings in areas where 300kPa bearing capacity is not available, is considered a suitable alternative foundation solution for the site.

6.0 Earthworks

It is anticipated that earthworks at the site will be limited to minor cuts or fills. All topsoil/non-engineered fill should be stripped from the building footprint area, and stockpiled for re-spreading (if suitable).

Following preparation of the building platform, a subgrade inspection should be carried out to determine ground conditions do not vary from the expected.

Some proof rolling at the base of the excavation may be advantageous to increase the bearing capacity. Should over-excavation and filling be required this should be subject to geotechnical review and discussed with a geotechnical engineer/geologist familiar with the contents of this report prior to excavation. Any fill utilised in building platforms should be imported engineered hardfill.

7.0 Conclusion

1. Ground conditions at the test locations indicate 300kPa is variable and not consistently available across the site. The site does not meet the criteria for "good ground as per NZS 3604.
2. New foundation options suitable for the site include: a TC2 Option 1 to 4 enhanced concrete foundation (Type C) or a TC2 timber floor foundation (Type A or B).
3. Alternatively, a foundation which is specifically designed for the ground conditions encountered at the site, such as widening the foundation footings in areas where 300kPa bearing capacity is not available, is considered a suitable alternative foundation solution for the site.
4. The near surface strength of the site soils shall be confirmed during construction for the selected foundation to ensure that a minimum ultimate bearing capacity of 200kPa is achieved.

8.0 Limitation

This report has been prepared solely for the benefit of Freeman Homes Ltd as our client, with respect to the brief, and the Waimakariri District Council in processing the building consent. The reliance by other parties on the information or opinions contained in the report shall, without our prior review and agreement in writing, be at such parties' sole risk.

WAIMAKARIRI DISTRICT COUNCIL
Plans and specifications APPROVED in accordance with the Building Act 2004, clause 49 and the Building Regulations 1992, Clause 3
170037 13/03/2017 petert

Recommendations and opinions in this report are based on data from limited test positions. The nature and continuity of subsoil conditions away from the test positions are inferred, and it must be appreciated that actual conditions could vary considerably from the assumed model.

During excavation and construction the site should be examined by an engineer or engineering geologist competent to judge whether the exposed subsoils are compatible with the inferred conditions on which the report has been based. It is possible that the nature of the exposed subsoils may require further investigation and the modification of the design based upon this report.

Riley Consultants Ltd would be pleased to provide this service to Freeman Homes Ltd and believes the project would benefit from such continuity. In any event, it is essential Riley Consultants Ltd is contacted if there is any variation in subsoil conditions from those described in the report as it may affect the design parameters recommended in the report.

9.0 References

Repairing and rebuilding houses affected by the Canterbury earthquakes, Ministry of Business, Innovation and Employment, (Version 3, December 2012).

WAIMAKARIRI DISTRICT COUNCIL
Plans and specifications APPROVED in accordance with the Building Act 2004, clause 49 and the Building Regulations 1992, Clause 3
170037 13/03/2017 petert

Consent Issued BC170037

WAIMAKARIRI DISTRICT COUNCIL
Plans and specifications APPROVED in accordance with the Building Act 2004, clause 49 and the Building Regulations 1992, Clause 3
170037 13/03/2017 petert

APPENDIX A

Hand auger and Scala penetrometer test results

RILEY CONSULTANTS

Christchurch:
395 Madras Street Christchurch 8013
PO Box 4355, Christchurch 8140
Tel. 03 379 4402 Email: rileychch@riley.co.nz

Auckland:
4 Fred Thomas Drive, Takapuna, Auckland 0622
PO Box 100253, North Shore, Auckland 0745
Tel. 09 489 7872 Email: riley@riley.co.nz

Consent Issued BC170037

BC170037

GEOTECHNICAL AND GEOLOGICAL INFORMATION

SOIL TYPES AND SYMBOLS

- FILL
- TOPSOIL
- SILT
- SAND
- GRAVEL
- CLAY
- PEAT
- GROUNDWATER LEVEL
- 10,11,10 — SCALA PENETROMETER LAST 3 NUMBER OF BLOWS PER 50mm INCREMENT

ROCK TYPES AND SYMBOLS

- SANDSTONE
- SILTSTONE
- MUDSTONE
- LIMESTONE
- BASALT
- TUFF
- IGNIMBRITE
- GREYWACKE

SOIL STRENGTH CLASSIFICATION

FINE GRAINED COHESIVE SOILS

TERM	FIELD IDENTIFICATION	UNDRAINED SHEAR STRENGTH (KPa)
Very Soft (Vs)	Exudes between fingers when squeezed.	<12
Soft (S)	Easily indented by fingers.	12 – 25
Firm (F)	Indented only by strong finger pressure.	25 – 50
Stiff (St)	Indented by thumb pressure.	50 – 100
Very Stiff (VSt)	Indented by thumbnail.	100 – 200
Hard (H)	Difficult to indent by thumbnail.	200+

SPT & SCALA PENETROMETER RESULTS

TERM	SPT VALUE No. of BLOWS/300mm	SCALA PENETROMETER No. of BLOWS/100mm
very dense	>50	17+
dense	30 – 50	7 – 17
medium dense	10 – 30	3 – 7
loose	4 – 10	1 – 3
very loose	0 – 4	0 – 2

ROCK STRENGTH CLASSIFICATION

TERM		FIELD IDENTIFICATION	UNCONFINED UNIAXIAL COMPRESSIVE STRENGTH (MPa)
Extremely weak	(EW)	Indented by thumbnail.	< 1
Very weak	(VW)	Crumbles under firm blows with point of geological hammer. Can be peeled with pocket knife.	1 – 5
Weak	(W)	Difficult to peel with pocket knife.	5 – 20
Moderately strong	(MS)	Cannot be scraped or peeled with pocket knife.	20 – 50
Strong	(S)	More than one blow of geological hammer to fracture.	50 – 100
Very strong	(VS)	Many blows of geological hammer to break.	100 – 250
Extremely strong	(ES)	Can only be chipped with geological hammer.	250+

MOISTURE CONDITION

Dry (D)	Looks and feels dry; powdery and friable.
Moist (M)	Feels cool; darkened in colour; no free water when remoulded.
Wet (W)	Feels cool; darkened in colour; free water forms on hands.
Saturated (S)	Free water is present on sample.

SAMPLE TYPES

- UNDISTURBED
- MACHINE AUGER DISTURBED
- D — HAND AUGER DISTURBED
- STANDARD PENETRATION TEST (solid cone)
- STANDARD PENETRATION TEST (hollow cone)

DRILLING METHOD

OB	OPEN BARREL
TT	TRIPLE TUBE
WB	WASH BORE
SH	UNDISTURBED SHELBY TUBE
RC	ROCK CORE
SPT	STANDARD PENETRATION TEST

FIELD TESTS

V	SHEAR VANE (corrected to BS:1377)
R	REMOULDED STRENGTH
P	POCKET PENETROMETER
CH	CLEGG HAMMER

INFORMATION BASED ON THE NZ GEOTECHNICAL SOCIETY INC. GUIDELINES FOR THE CLASSIFICATION AND DESCRIPTION OF SOIL AND ROCK FOR ENGINEERING PURPOSES

WAIMAKARIRI DISTRICT COUNCIL
Plans and specifications APPROVED in accordance with the Building Act 2004, clause 49 and the Building Regulations 1992, Clause 3
170037 13/03/2017 petert

Consent Issued BC170037

RILEY CONSULTANTS Engineers and Geologists
fsdn
njnsadc
sacfd
Tel: csa
Fax: sadc

HAND AUGER LOG

Project:	Location:	Hole position:	No.:
Elm Green Subdivision	83 Kippenberger Ave, Rangiora	Refer to Site Plan.	HA401

Job No.:	Start Date:	Finish Date:	Ground Level (m LINZ):	Co-Ordinates (NZTM2000):
09816-4	02-11-16	02-11-16	22.00	E 1,568,147.1 N 5,205,462.6

Client:	Hole Depth:	Sheet:
Freeman Homes Ltd	2.00 m	1 of 1

Elevation (m LINZ)	Depth (m)	Geological Unit	Geological Description (refer to separate Geotechnical and Geological Information sheet for further information)	Tests
+22.00			SILT with minor sand, organics and trace gravel; dark greyish brown. "Stiff"; moist; non plastic; sand, fine to medium; organics, rootlets; gravel, fine to medium, subrounded, greywacke. (FILL) 0.30m Grades to include light brown mottling. "Firm". 0.50m Grades to "stiff".	No. 1 2, 2, 2, 2, 2, 2, 1, 2, 2, 1, 2, 3, 3, 3, 4, 3, 3, 4, 4, 4
+21.40	0.60		SILT with some sand; greyish brown with orange brown mottling. "Stiff"; dry to moist; non plastic; sand, fine to medium. (SPRINGSTON FORMATION)	
+21.20	0.80		Silty fine to medium SAND; greyish brown with orange brown mottling. Medium dense; moist. 0.80m Includes pockets of sandy SILT; low plasticity. 1.65m Grades to loose.	No. 2 3, 3, 4, 3, 3, 3, 3, 3, 4, 3, 2, 2, 1, 1, 1, 1, 1, 1, 1
+20.20	1.80		Sandy SILT; greyish brown with orange brown mottling. "Soft"; wet; dilatant; sand, fine to medium.	
+20.00	2.00		EOH @ 2.00 m	No. 3 2, 2, 3, 2, 2, 3, 2, 2, 2, 2, 2, 2, 3, 3, 3, 4, 3, 4, 3, 3

Legend

Soil Shear Strength (kPa): 50 100 150 200

Scala Penetrometer (blows / 50 mm): 3 6 9 12 15

Groundwater: 1.00m, 2.00m, 3.00m

Soil Moisture

Samples

Instrument/ Backfill

WAIMAKARIRI DISTRICT COUNCIL
Plans and specifications APPROVED in accordance with the Building Act 2004, clause 49 and the Building Regulations 1992, Clause 3
170037 13/03/2017 petert

Explanations:

- Scala Penetrometer - blows/50mm
- Permeability Test
- Schmidt Hammer
- Insitu Vane Shear Strength (kPa) V=Peak, R=Residual, UTP=Unable to penetrate
- Small Disturbed Sample
- Large Disturbed Sample
- U100 Undisturbed Sample
- Water Strike (1st, 2nd ...)
- Water Rise (1st, 2nd ...) and Rise Time (minutes)

Soil Moisture:
D = dry; M = moist; W = wet; S = saturated

GROUNDWATER

- [X] Not Encountered
- [ ] Slow Seep (depth)
- [ ] Rapid Inflow (depth)

HOLE TERMINATED DUE TO:
[X] Target depth [ ] Refusal [ ] Collapse

Remarks

1. Ground levels and co-ordinates are approximate and subject to survey confirmation.
2. Strength terms for cohesive soils are inferred from Scala penetrometer test (as indicated by quotation marks).
3. Hand auger over-augered from 1m to 1.05m bgl.

All dimensions in metres Scale 1:25	Contractor:	Rig/Plant Used: Hand Auger 70 mm	Logged by: CFC	Checked by: LK

RILEY AGS 3_1 NZ LIB 13.GLB Log RILEY CHCH HA 09816-4 ELM GREEN (83 KIPPENBERGER) GEOTECH.GPJ <<DrawingFile>> 22/11/2016 14:04 Produced by gINT Professional

Consent Issued BC170037

BC170037

RILEY CONSULTANTS Engineers and Geologists

fsdn
njnsadc
sacfd
Tel: csa
Fax: sadc

HAND AUGER LOG

Project:	Location:	Hole position:	No.:
Elm Green Subdivision	83 Kippenberger Ave, Rangiora	Refer to Site Plan.	HA402

Job No.:	Start Date: 02-11-16 Finish Date: 02-11-16	Ground Level (m LINZ):	Co-Ordinates (NZTM2000):
09816-4		22.00	E 1,568,140.7 N 5,205,453.0

Client:	Hole Depth:	Sheet:
Freeman Homes Ltd	2.00 m	1 of 1

Elevation (m LINZ)	Depth (m)	Geological Unit	Geological Description (refer to separate Geotechnical and Geological Information sheet for further information)	Legend	Soil Shear Strength (kPa)	Scala Penetrometer (blows / 50 mm)	Groundwater	Soil Moisture	Samples	Tests	Instrument/ Backfill
+22.00					50 100 150 200	3 6 9 12 15					
			SILT with minor sand, organics and trace gravel; dark greyish brown. "Firm"; moist; non plastic; sand, fine to medium; organics, rootlets <2mm; gravel, fine to medium, subrounded, greywacke. (FILL)							No. 1 1, 1, 1, 2, 1, 2, 2, 3, 2, 3, 2, 4, 3, 4, 4, 4, 5, 5, 5, 4	
+21.60	0.40		0.25m Grades to "stiff".								
			SILT with some sand; greyish brown with orange brown mottling. "Stiff"; dry; non plastic; sand, fine to medium. (SPRINGSTON FORMATION)								
+21.30	0.70										
			Silty fine to medium SAND; greyish brown with orange brown mottling. Dense; moist.			1.00m					
	1									No. 2 4, 4, 5, 4, 4, 4, 4, 4, 3, 3, 2, 2, 2, 3, 3, 2, 3, 3, 3	
+20.50	1.50										
			Sandy SILT; greyish brown with orange brown mottling. "Stiff"; moist to wet; low plasticity; sand, fine to medium.								
+20.20	1.80										
+20.00	2.00		Fine to medium SAND with some silt; dark brown. Medium dense; wet; dilatant.			2.00m					
	2		EOH @ 2.00 m							No. 3 1, 2, 2, 3, 2, 2, 3, 3, 2, 2, 2, 2, 3, 3, 3, 3, 3, 3, 3	
	3					3.00m					
	4										

WAIMAKARIRI DISTRICT COUNCIL
Plans and specifications APPROVED in accordance with the Building Act 2004, clause 49 and the Building Regulations 1992, Clause 3
170037 13/03/2017 petert

Explanations:

- Scala Penetrometer - blows/50mm
- Permeability Test
- Schmidt Hammer
- Insitu Vane Shear Strength (kPa) V=Peak, R=Residual, UTP=Unable to penetrate
- Small Disturbed Sample
- Large Disturbed Sample
- U100 Undisturbed Sample
- Water Strike (1st, 2nd ...)
- Water Rise (1st, 2nd ...) and Rise Time (minutes)

Soil Moisture:
D = dry; M = moist; W = wet; S = saturated

GROUNDWATER

- [X] Not Encountered
- [ ] Slow Seep (depth)
- [ ] Rapid Inflow (depth)

HOLE TERMINATED DUE TO:
[X] Target depth [ ] Refusal [ ] Collapse

Remarks

1. Ground levels and co-ordinates are approximate and subject to survey confirmation.
2. Strength terms for cohesive soils are inferred from Scala penetrometer test (as indicated by quotation marks).
3. Hand auger over-augered from 1m to 1.05m bgl and 2m to 2.05m bgl.

All dimensions in metres Scale 1:25	Contractor:	Rig/Plant Used: Hand Auger 70 mm	Logged by: CFC	Checked by: LK

RILEY AGS 3_1 NZ LIB 13.GLB Log RILEY CHCH HA 09816-4 ELM GREEN (83 KIPPENBERGER) GEOTECH.GPJ <<DrawingFile>> 22/11/2016 14:04 Produced by gINT Professional

Consent Issued BC170037

BC170037

RILEY CONSULTANTS Engineers and Geologists

fsdn
njnsadc
sacfd
Tel: csa
Fax: sadc

SCALA LOG

Project:	Location:	Hole position:	No.:
Elm Green Subdivision	83 Kippenberger Ave, Rangiora	Refer to Site Plan.	SC401

Job No.:	Start Date:	Finish Date:	Ground Level (m LINZ):	Co-Ordinates (NZTM2000):
09816-4	02-11-16	02-11-16	22.00	E 1,568,148.6 N 5,205,454.5

Client:	Termination Depth (below ground level):	Sheet:
Freeman Homes Ltd	2.00 m	1 of 1

Elevation (m LINZ)	Depth (m)	Descriptive Strength Term (inferred from in-situ penetration test)	Legend	Weathering	Field Strength (Soil / Rock)	Scala Penetrometer (blows / 50 mm)	Fluid & Water	Samples	Tests	Instrument/ Backfill
+22.00				RS CW HW MW SW UW	VS VL F St MD St SD VD HE W W Ms S VS ES	0 3 6 9 12 15				

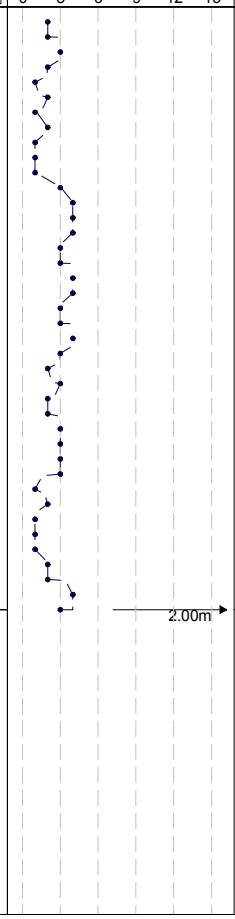

No. 1
2, 2, 3,
2, 1, 2,
1, 2, 1,
1, 1, 3,
4, 4, 4,
3, 3, 4,
4, 3, 3,
4, 3, 2,
3, 2, 2,
3, 3, 3,
3, 1, 2,
1, 1, 1,
2, 2, 4,
3

WAIMAKARIRI DISTRICT COUNCIL
Plans and specifications APPROVED in accordance with the Building Act 2004, clause 49 and the Building Regulations 1992, Clause 3
170037 13/03/2017 petert

SKETCH:

MAP

Explanations:

Rock Mass Weathering - unweathered, slightly weathered, moderately weathered, highly weathered, completely weathered, residually weathered

Relative soil Strength - very soft/very loose, soft/loose, firm/medium dense, stiff/dense, very stiff/very dense

- Small Disturbed Sample
- Large Disturbed Sample
- U100 Undisturbed Sample

- Scala Penetrometer: blows/50mm
- Permeability Test
- Clegg Hammer: impact value (test repetitions)
- Insitu Vane Shear Strength (kPa) P=Peak, R=Residual, UTP=Unable to penetrate
- Water Strike (1st, 2nd ...)
- Water Rise (1st, 2nd ..) & Rise Time (min's.)

Groundwater:

- [X] None
- [ ] Rods wet below

HOLE TERMINATED DUE TO:

- [X] Target depth
- [ ] Refusal

Remarks

1. Ground levels and co-ordinates are approximate and subject to survey confirmation.

All dimensions in metres Scale 1:25	Contractor:	Rig/Plant Used: Scala Penetrometer	Logged by: CFC	Checked by: LK

RILEY AGS 3_1 NZ LIB 13.GLB Log RILEY CHCH SC 09816-4 ELM GREEN (83 KIPPENBERGER) GEOTECH.GPJ <<DrawingFile>> 22/11/2016 14:05 Produced by gINT Professional

Consent Issued BC170037

RILEY CONSULTANTS Engineers and Geologists
fsdn
njnsadc
sacfd
Tel: csa
Fax: sadc

SCALA LOG

Project:	Location:	Hole position:	No.:
Elm Green Subdivision	83 Kippenberger Ave, Rangiora	Refer to Site Plan.	SC402

Job No.:	Start Date:	Finish Date:	Ground Level (m LINZ):	Co-Ordinates (NZTM2000):
09816-4	02-11-16	02-11-16	22.00	E 1,568,139.2 N 5,205,461.1

Client:	Termination Depth (below ground level):	Sheet:
Freeman Homes Ltd	2.00 m	1 of 1

Elevation (m LINZ)	Depth (m)	Descriptive Strength Term (inferred from in-situ penetration test)	Legend	Weathering	Field Strength (Soil / Rock)	Scala Penetrometer (blows / 50 mm)	Fluid & Water	Samples	Tests	Instrument/ Backfill
+22.00				RS CW HW MW SW UW	VS VL F St MD St St VD H EW W Ms S VS ES	0 3 6 9 12 15			No. 1 2, 3, 2, 3, 2, 3, 2, 2, 2, 1, 2, 2, 2, 2, 2, 2, 2, 2, 2, 2, 2, 2, 3, 2, 3, 3, 3, 3, 3, 3, 3, 3, 2, 2, 3, 2, 2, 3, 2, 2	
	1									
	2					2.00m				

WAIMAKARIRI DISTRICT COUNCIL
Plans and specifications APPROVED in accordance with the Building Act 2004, clause 49 and the Building Regulations 1992, Clause 3
170037 13/03/2017 petert

SKETCH:

MAP

Explanations:

Rock Mass Weathering - unweathered, slightly weathered, moderately weathered, highly weathered, completely weathered, residually weathered

Relative soil Strength - very soft/very loose, soft/loose, firm/medium dense, stiff/dense, very stiff/very dense

- Small Disturbed Sample
- Large Disturbed Sample
- U100 Undisturbed Sample
- Scala Penetrometer: blows/50mm
- Permeability Test
- Clegg Hammer: impact value (test repetitions)
- Insitu Vane Shear Strength (kPa) P=Peak, R=Residual, UTP=Unable to penetrate
- Water Strike (1st, 2nd ...)
- Water Rise (1st, 2nd ..) & Rise Time (min's.)

Groundwater:

- [X] None
- [ ] Rods wet below

HOLE TERMINATED DUE TO:

- [X] Target depth
- [ ] Refusal

Remarks

1. Ground levels and co-ordinates are approximate and subject to survey confirmation.

All dimensions in metres Scale 1:25	Contractor:	Rig/Plant Used: Scala Penetrometer	Logged by: MTT	Checked by: LK

RILEY AGS 3_1 NZ LIB 13.GLB Log RILEY CHCH SC 09816-4 ELM GREEN (83 KIPPENBERGER) GEOTECH.GPJ <<DrawingFile>> 22/11/2016 14:05 Produced by gINT Professional

Consent Issued BC170037

BC170037

WAIMAKARIRI DISTRICT COUNCIL
Plans and specifications APPROVED in accordance with the Building Act 2004, clause 49 and the Building Regulations 1992, Clause 3
170037 13/03/2017 petert

APPENDIX B

Site Location Plan

RILEY Dwg: 09816/4-L40

Consent Issued BC170037

BC170037

SITE

WAIMAKARIRI DISTRICT COUNCIL
Plans and specifications APPROVED in accordance with the Building Act 2004, clause 49 and the Building Regulations 1992, Clause 3
170037 13/03/2017 petert

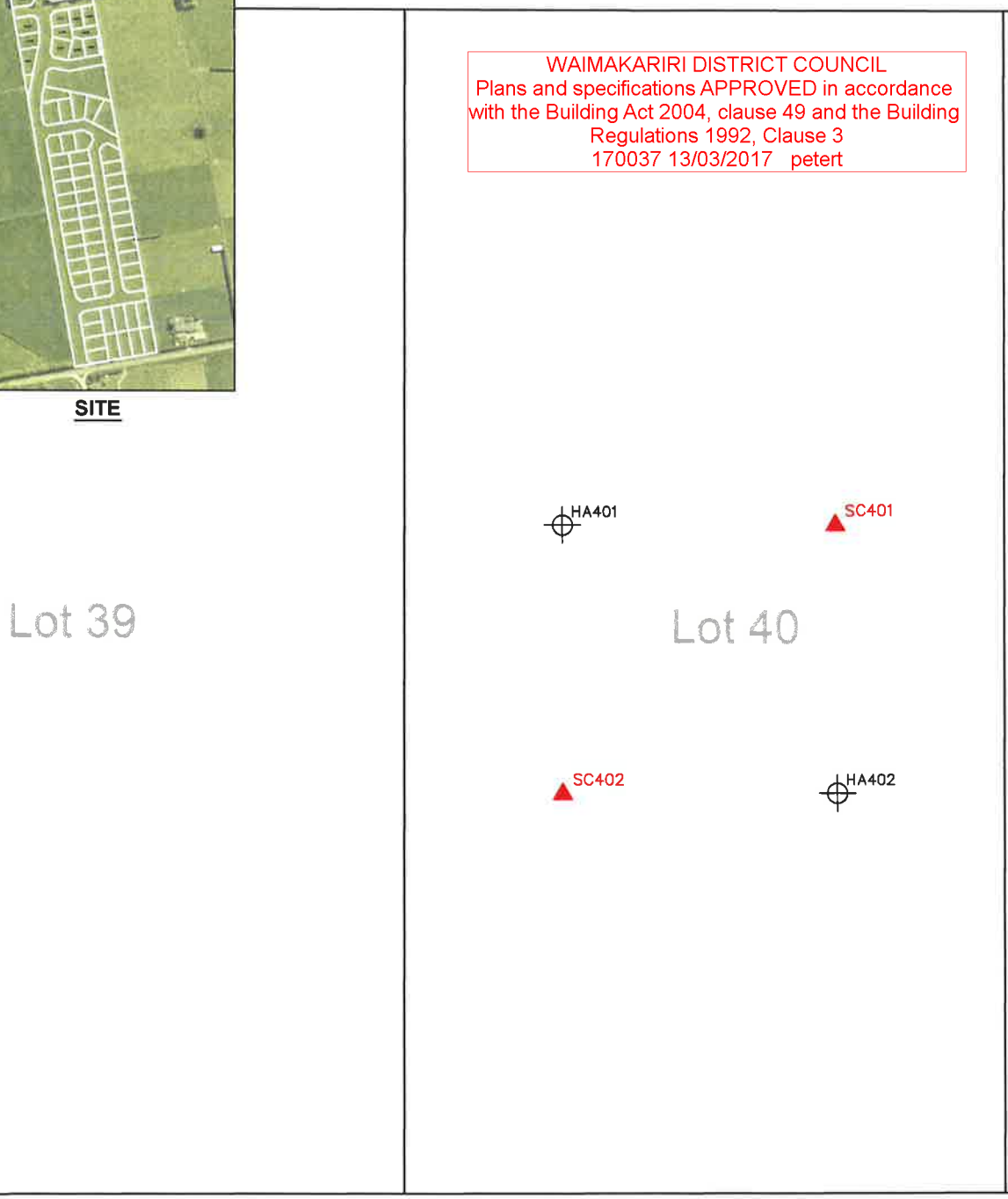

LEGEND

SC1	SCALA PENETROMETER TEST LOCATIONS
HA1	HAND AUGER TEST LOCATIONS
	LOT BOUNDARY

NOTE:-

1. PHOTO SOURCED FROM CHRISTCHURCH POST EARTHQUAKE AERIAL PHOTOS (24TH FEB 2011), LINZ
2. HOLE/TEST LOCATIONS ACCURATE TO ± 1m RELATIVE TO FEATURES IN PHOTO UNDERLAY

2 0 4 8m
SCALE 1:200

DESIGNED JIEC	RILEY CONSULTANTS	FREEMAN HOMES LTD	CADFILE 09816/4-L40	DATE 18.10.16
DRAWN RBT	○ AUCKLAND ● CHRISTCHURCH	ELM GREEN SUBDIVISION	SCALES (A4) AS SHOWN	
CHECKED		LOT 40, TEST LOCATIONS	ACENZ DRAWING No. 09816/4-L40	REV. 1

Consent Issued BC170037

BC170037

WAIMAKARIRI DISTRICT COUNCIL
Plans and specifications APPROVED in accordance with the Building Act 2004, clause 49 and the Building Regulations 1992, Clause 3
170037 13/03/2017 petert

AUCKLAND
Riley Consultants Limited
4 Fred Thomas Drive, Takapuna
PO Box 100 253, NSMC, Auckland, New Zealand
Telephone 64 9 489 7872, Facsimile 64 9 489 7873
riley@riley.co.nz

www.riley.co.nz

CHRISTCHURCH
Riley Consultants Limited
Ground Floor, 395 Madras Street
PO Box 4355, Christchurch, New Zealand
Telephone 64 3 379 4402, Facsimile 64 3 379 4403
rileychch@riley.co.nz

www.riley.co.nz

ACENZ

ISO 9001 CERTIFIED GCS

blueprint CONSULTING ENGINEERS
YOUR VISION OUR INNOVATION YOUR SUCCESS

Consent Issued BC170037

WAIMAKARIRI DISTRICT COUNCIL
Plans and specifications APPROVED in accordance with the Building Act 2004, clause 49 and the Building Regulations 1992, Clause 3
170037 13/03/2017 petert

Printed 17/02/2017

Building Consent 170037
Received 20/2/17

DOCUMENT REGISTER and TRANSMITTAL - ISSUED

Project Name	**DATE OF ISSUE**													
Lot 37 & 40 Elm Green, Rangiora	Day	17												
	Month	2												
	Year	17												
	Issue For	Building Consent												
Project Number **SC153232**														
Client **Stonewood Homes**	Email (E)	E												
	Post (P)													
	Hand (H)													

DOCUMENT DESCRIPTION	DOCUMENT REF	#													
CALCULATIONS			.												
Strip Footing Calculations	SC153232D40	1	1												
DRAWINGS			.												
Structural Drawings	SC153232D62	1	1												
Standard Strip Footing Detail		S01-02	A												
Pad Footing Sketch Detail		SK1	A												
CERTIFICATION			.												
PS1 & RBW Certification	SC153232D81	1	1												

Distribution	Contact	Address													
Stonewood Homes	Olivia Yee	olivia.yee@stonewood.co.nz	x												
Stonewood Homes	Olivia Gallop	olivia.gallop@stonewood.co.nz	x												

Building Consent 170037
Received 20/2/17

Consent Issued BC170037

blueprint
CONSULTING ENGINEERS
YOUR VISION OUR INNOVATION YOUR SUCCESS

WAIMAKARIRI DISTRICT COUNCIL
Plans and specifications APPROVED in accordance with the Building Act 2004, clause 49 and the Building Regulations 1992, Clause 3
170037 13/03/2017 petert

PS1 Producer Statement & Cert. of Design Work

FOR

Building Consent

(PROJECT)

Lot 37 & 40 - Elm Green, Rangiora

(ADDRESS)

Stonewood Homes (Chch) Franchisee Ltd

(CLIENT)

Job Number: SC153232

Date: 17/02/2017

Auckland p: +64 9 294 8993 | a: PO Box 97607 Manukau 2241 NZ | w: bce.nz
Christchurch p: +64 3 928 2258 | a: PO Box 225, Christchurch 8140 | e: admin@bce.nz

Building Consent 170037
Received 20/2/17

Consent Issued BC170037

Building Code Clause(s) B1

PRODUCER STATEMENT – PS1 – DESIGN

(Guidance notes on the use of this form are printed on page 2)

ISSUED BY: Blueprint Consulting Engineers Limited
(Design Firm)

WAIMAKARIRI DISTRICT COUNCIL
Plans and specifications APPROVED in accordance with the Building Act 2004, clause 49 and the Building Regulations 1992, Clause 3
170037 13/03/2017 petert

TO: Stonewood Homes (Chch) Franchisee
(Owner/Developer)

TO BE SUPPLIED TO: Waimakariri District Council
(Building Consent Authority)

IN RESPECT OF: Professional Structural Engineering Services - Strip Footing Design and Pad Footing Design
(Description of Building Work)

AT: Lot 37 & 40 Elm Green, Rangiora
(Address)

Christchurch **LOT** 37 & 40 **DP** ..... **SO** .....

We have been engaged by the owner/developer referred to above to provide structural engineering services services in respect of the requirements of
(Extent of Engagement)

Clause(s) B1 of the Building Code for
All ○ or Part only ◉ (as specified in the attachment to this statement), of the proposed building work.

The design carried out by us has been prepared in accordance with:

◉ Compliance Documents issued by the Ministry of Business, Innovation & Employment VM1 or
(verification method / acceptable solution)

○ Alternative solution as per the attached schedule .....

The proposed building work covered by this producer statement is described on the drawings titled See attached PS1

Addendum SC153232 D81- 1.1 Drawing Schedule and numbered .....;
together with the specification, and other documents set out in the schedule attached to this statement.

On behalf of the Design Firm, and subject to:

(i) Site verification of the following design assumptions
1. Please reference the Geotechnical Report attached to this email
2. Please reference the Arch plans attached to this email
3. Please reference the truss design attached to this email

(ii) All proprietary products meeting their performance specification requirements;

I **believe on reasonable grounds** that a) the building, if constructed in accordance with the drawings, specifications, and other documents provided or listed in the attached schedule, will comply with the relevant provisions of the Building Code and that b), the persons who have undertaken the design have the necessary competency to do so. I also recommend the following level of construction monitoring/observation:

○ CM1 ◉ CM2 ○ CM3 ○ CM4 ○ CM5 (Engineering Categories) or ☐ as per agreement with owner/developer (Architectural)

I, Rohan Pollard am:
(Name of Design Professional)

■ CPEng 228756 #

☐ Reg Arch ..... #

I am a Member of : ■ IPENZ ☐ NZIA and hold the following qualifications: CPEng

The Design Firm issuing this statement holds a current policy of Professional Indemnity Insurance no less than $200,000*.

The Design Firm is a member of ACENZ: ■

SIGNED BY Rohan Pollard ON BEHALF OF Blueprint Consulting Engineers
(Design Firm)

Date 17 February 2017 (signature) .....

Note: This statement shall only be relied upon by the Building Consent Authority named above. Liability under this statement accrues to the Design Firm only. The total maximum amount of damages payable arising from this statement and all other statements provided to the Building Consent Authority in relation to this building work, whether in contract, tort or otherwise (including negligence), is limited to the sum of $200,000.*

This form is to accompany **Form 2 of the Building (Forms) Regulations 2004** for the application of a Building Consent.

THIS FORM AND ITS CONDITIONS ARE COPYRIGHT TO ACENZ, IPENZ AND NZIA

Building Consent 170037
Received 20/2/17

Consent Issued BC170037

blueprint
CONSULTING ENGINEERS
YOUR VISION OUR INNOVATION YOUR SUCCESS

PS1 ADDENDUM – SC153232D81- 1.1

WAIMAKARIRI DISTRICT COUNCIL
Plans and specifications APPROVED in accordance with the Building Act 2004, clause 49 and the Building Regulations 1992, Clause 3
170037 13/03/2017 petert

Job / Project Number: **SC153232**

Date: **17 February 2017**

Address: **Lot 37 & 40 Elm Green, Rangiora**

Specific Design Elements of Building Work

Specific Design Elements relating to PS1 for the subject project as follows:

Enhanced NZS3604:2011 Strip Footing

Pad Footing Design

Drawing Schedule

Document Type	Title	Drawing #'s	Rev.
Blueprint Structural DWG	Standard Strip Footing Detail	S01-02	A
Blueprint Sketch Detail	Pad Footing Sketch	SK1	A

Building Consent 170037
Received 20/2/17

Consent Issued BC170037

blueprint
CONSULTING ENGINEERS
YOUR VISION OUR INNOVATION YOUR SUCCESS

ENGINEERING INSPECTION REQUIREMENTS

WAIMAKARIRI DISTRICT COUNCIL
Plans and specifications APPROVED in accordance with the Building Act 2004, clause 49 and the Building Regulations 1992, Clause 3
170037 13/03/2017 petert

Job Number: SC153232

Job Name: Lot 37 & 40 Elm Green, Rangiora

Address: Lot 37 & 40 Elm Green, Rangiora

Design Work Carried Out:

Enhanced NZS3604:2011 Strip Footing

Pad Footing Design

Inspections Required: Inspection by Engineer to confirm the bearing conditions of 200kPa GUBC after trench excavation

Contact: Blueprint - Christchurch Office

Phone: 03 928 2258

Mobile: 0274 77 22 61

Booking Time: **MINIMUM 48 hours notice is required for all inspections**

Blueprint will provide PS4 certifcate covering these inspections only after inspections have been carried out and construction works are to the satisfaction of the inspecting Engineer.

Building Consent 170037
Received 20/2/17

Consent Issued BC170037

blueprint
CONSULTING ENGINEERS
YOUR VISION OUR INNOVATION YOUR SUCCESS

STRUCTURAL DRAWINGS

WAIMAKARIRI DISTRICT COUNCIL
Plans and specifications APPROVED in accordance with the Building Act 2004, clause 49 and the Building Regulations 1992, Clause 3
170037 13/03/2017 petert

FOR

Building Consent

(PROJECT)

Lot 37 & 40 - Elm Green, Rangiora

(ADDRESS)

Stonewood Homes (Chch) Franchisee Ltd

(CLIENT)

Job Number: SC153232

Date: 17/02/2017

Auckland p: +64 9 294 8993 | a: PO Box 97607 Manukau 2241 NZ | w: bce.nz
Christchurch p: +64 3 928 2258 | a: PO Box 225, Christchurch 8140 | e: admin@bce.nz

Consent Issued BC170037

Building Consent 170037
Received 20/2/17

WAIMAKARIRI DISTRICT COUNCIL
Plans and specifications APPROVED in accordance with the Building Act 2004, clause 49 and the Building Regulations 1992, Clause 3
170037 13/03/2017 petert

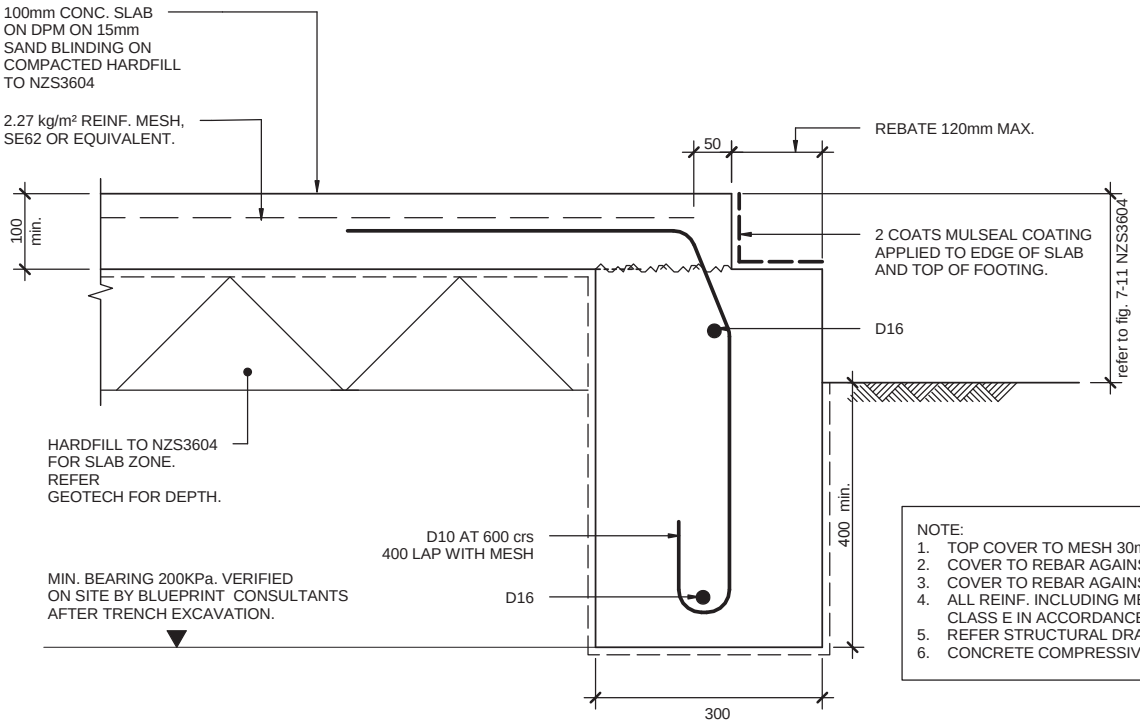

NOTE:
1. TOP COVER TO MESH 30mm
2. COVER TO REBAR AGAINST GROUND 75mm
3. COVER TO REBAR AGAINST FORMWORK 50mm.
4. ALL REINF. INCLUDING MESH SHALL BE DUCTILITY CLASS E IN ACCORDANCE WITH NZS4671.
5. REFER STRUCTURAL DRAWINGS FOR CAST IN ITEMS.
6. CONCRETE COMPRESSIVE STRENGTH 20MPa

1 / - strip footing section
1 : 10

BUILDING CONSENT

No.	Date	By	Description
A	15-02-2017	JMcC	Building Consent

ALL DIMENSIONS TO BE VERIFIED ON SITE BEFORE MAKING ANY SHOP DRAWINGS OR COMMENCING ANY WORK. THE COPYRIGHT OF THESE DRAWINGS REMAINS WITH BLUEPRINT CONSULTING ENGINEERS.

blueprint CONSULTING ENGINEERS

CLIENT & PROJECT
STONEWOOD HOMES NZ
LOT 40 ELM GREEN
RANGIORA

TITLE
Standard Strip Footing Detail

Scale	Drawn	Design	Approved
1 : 10 @ A4	JM	JM	JMC

Project No.	Drawing No.	Rev
SC153232	S01-02	A

Building Consent 170037
Received 20/2/17

Consent Issued BC170037

blueprint
CONSULTING ENGINEERS

Client: Stonewood Homes
Project: Lot 37 & 40 Elm Green, Rangiora
Job#: SC153232 **Page:** SK1
Date: 17/02/17 **Rev:** A

PAD FOOTING SKETCH.

WAIMAKARIRI DISTRICT COUNCIL
Plans and specifications APPROVED in accordance with the Building Act 2004, clause 49 and the Building Regulations 1992, Clause 3
170037 13/03/2017 petert

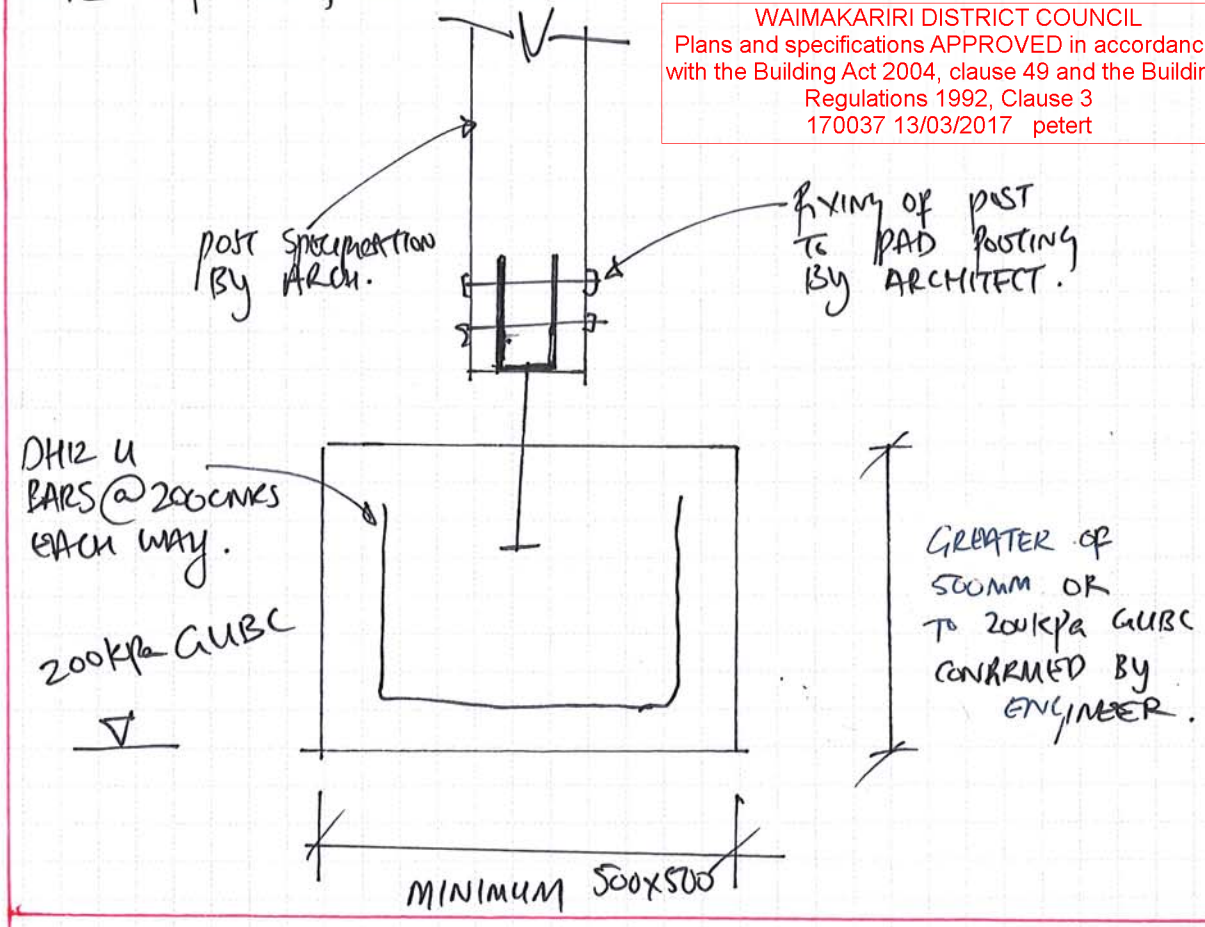

COVERED AREA = $1.96m^2$.

ROOF LOAD (SNOW) = $1.2G + S_n$ = $1.2(0.55) + 0.441$.
= 2.15kPa

ROOF POINT LOAD = $2.15 \times 1.96 = 4.23kN$.

BEARING = $\frac{4.23kN}{0.5^2}$ = 16kPa x2 = 32kPa UBC. <200kPa.
∴ ok.

Building Consent 170037
Received 20/2/17

Consent Issued BC170037

blueprint
CONSULTING ENGINEERS
YOUR VISION OUR INNOVATION YOUR SUCCESS

WAIMAKARIRI DISTRICT COUNCIL
Plans and specifications APPROVED in accordance with the Building Act 2004, clause 49 and the Building Regulations 1992, Clause 3
170037 13/03/2017 petert

STRUCTURAL DESIGN CALCULATIONS

FOR

Building Consent

(PROJECT)

Lot 37 & 40 - Elm Green, Rangiora

(ADDRESS)

Stonewood Homes (Chch) Franchisee Ltd

(CLIENT)

Job Number:	SC153232
Revision Number:	1
Date:	16/02/2017
Calc Ref #:	SC153232D40-1.1

Auckland p: +64 9 294 8993 | a: PO Box 97607 Manukau 2241 NZ | w: bce.nz
Christchurch p: +64 3 928 2258 | a: PO Box 225, Christchurch 8140 | e: admin@bce.nz

WAIMAKARIRI DISTRICT COUNCIL
Plans and specifications APPROVED in accordance with the Building Act 2004, clause 49 and the Building Regulations 1992, Clause 3
170037 13/03/2017 petert

DESIGN FEATURES REPORT

CLIENT: Stonewood Homes
PROJECT REF: SW153232
PROJECT ADDRESS: Lot 40 Elm Green, Rangiora, Christchurch

BUILDING DESCRIPTION:

- Single Storey Dwelling
- Heavy weight cladding
- Roof cladding Colorsteel Metal Tile
- 25 Degree Roof Slope
- Timber Framing

Design Assumptions:

- Stonewood Homes Plans Ref:153232 by Jeremy Harrison dated 17/1/2017
- Placemakers Truss Design Ref: 00119837 dated 16/Dec/2016

Where any of the above assumptions are not achieved, Blueprint Consulting Engineers should be contacted prior to work commencing.

FOUNDATION DESIGN

GEOTECHNICAL REPORTS:

In accordance with Geotechnical Report, and request by Local council, the site has a reduced bearing capacity of 200kPa GUBC, which indicates that it is outside the scope of NZS3604:2011. Foundations should extend to a minimum of 400mm BGL to 200kPa, and to be confirmed by Engineer at the time of excavation that all topsoil and 200kPa bearing is achieved.

DESIGN CALCULATIONS:

Design Calculations should be checked in accordance with:

i. AS1170: Using combination load cases for maximum building loads

CONSTRUCTION MONITORING:

Trench bearing inspection will be required and a Construction Review Certification (PS4) will only be issued when Inspection has been carried out to the satisfaction of the Inspecting Structural Engineer.

1.1 - BUILDING LOCATION & OVERVIEW

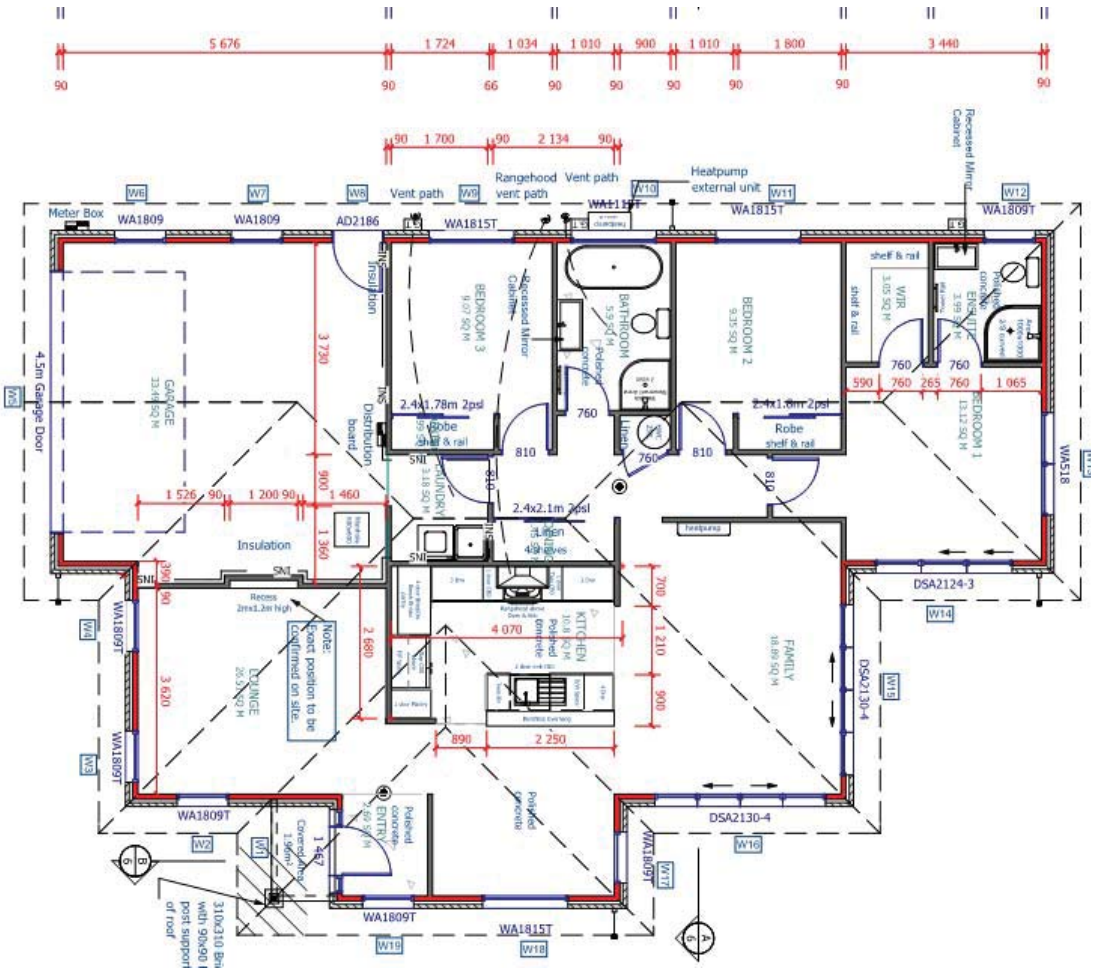

LOT 40 ELM GREEN, RANGIORA - PROPOSED DWELLING SUMMARY:

WAIMAKARIRI DISTRICT COUNCIL
Plans and specifications APPROVED in accordance with the Building Act 2004, clause 49 and the Building Regulations 1992, Clause 3
170037 13/03/2017 petert

PROPOSED STRUCTURE

- Timber Frame (NZS3604:2011)
- Timber Truss Roof
- Cladding Ground Floor - 70 Series Brick with Linear Feature

SPECIFIC DESIGN ELEMENTS

- SED Enhanced NZS3604:2011 Foundation for 200kPa GUBC

2 - LOADS

WAIMAKARIRI DISTRICT COUNCIL
Plans and specifications APPROVED in accordance with the Building Act 2004, clause 49 and the Building Regulations 1992, Clause 3
170037 13/03/2017 petert

2.1 WALL LOADS

WAIMAKARIRI DISTRICT COUNCIL
Plans and specifications APPROVED in accordance with the Building Act 2004, clause 49 and the Building Regulations 1992, Clause 3
170037 13/03/2017 petert

PROPOSED EXTERNAL WALLS

90 x 45 framing @ 400 crs				0.054
10 mm Gib				0.07
7 mm Ecoply				0.17
Insulation				0.02
Brick				1.36
Misc				0.05 kPa
Total				0.65
ADOPT				**1.7 kPa**

2.2 ROOF LOADING

WAIMAKARIRI DISTRICT COUNCIL
Plans and specifications APPROVED in accordance with the Building Act 2004, clause 49 and the Building Regulations 1992, Clause 3
170037 13/03/2017 petert

Roof Loads Data

Roofing

Corrugated Iron
Plywood 15mm and Membr

$w_r := \frac{Roof}{98.1} \cdot kPa = 0.082 \cdot kPa$

Purlins

45x45
70x45

Spacing

600
900

$w_p := \frac{Purlin}{98.1 \cdot Spacing} \cdot kPa = 0.029 \cdot kPa$

Framing

Trusses
140x45

Spacing

900
1200

$w_f := \frac{Framing}{98.1 \cdot Spacing} \cdot kPa = 0.113 \cdot kPa$

Battens

75x25
75x40

Spacing

600
900

$w_b := \frac{Battens}{98.1 \cdot Spacing} \cdot kPa = 0.02 \cdot kPa$

Ceiling

13mm Gib
25mm Metr:

$w_c := \frac{Ceiling}{98.1} \cdot kPa = 0.133 \cdot kPa$

Miscellaneous Roof Dead Load

Misc :=

4kg/m2
5kg/m2

$w_m := \frac{Misc}{98.1} kPa = 0.041 \cdot kPa$

Total Roof Weight $w_t := Ceil(w_r + w_p + w_f + w_b + w_c + w_m, 0.05kPa) = 0.45 \cdot kPa$

Roof Pitch = 25 Deg
Snow Loads = (60-25)/50 = 0.7 * 0.7*0.9 = 0.441kPa

3 - GRAVITY STRUCTURAL DESIGN

WAIMAKARIRI DISTRICT COUNCIL
Plans and specifications APPROVED in accordance with the Building Act 2004, clause 49 and the Building Regulations 1992, Clause 3
170037 13/03/2017 petert

3.1 - BUILDING OVERLAY

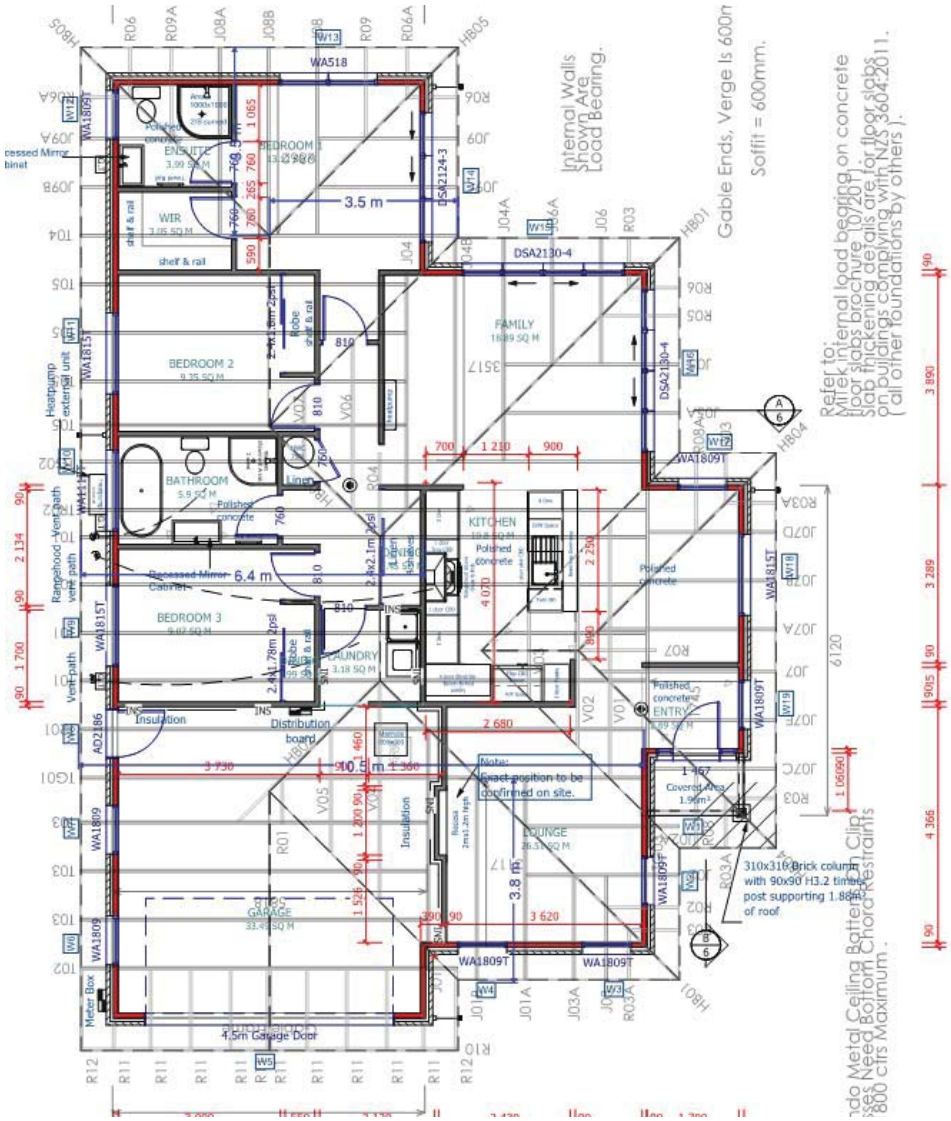

MAXIMUM ROOF LOADS:

10.5/2 = 5.25m

MAXIMUM WALL LOADS:

2.42m Brick Veneer

Maximum Point Load over slider door in Family Room = 3.5 x 2.4/2 = 4.2m2 Roof Load

WAIMAKARIRI DISTRICT COUNCIL
Plans and specifications APPROVED in accordance with the Building Act 2004, clause 49 and the Building Regulations 1992, Clause 3
170037 13/03/2017 petert

3.2 - FOUNDATION CALCULATION (i)

WAIMAKARIRI DISTRICT COUNCIL
Plans and specifications APPROVED in accordance with the Building Act 2004, clause 49 and the Building Regulations 1992, Clause 3
170037 13/03/2017 petert

STRIP FOOTING — Bearing Check

Beam Details		
Select Trial Sizes	Width	0.30 m
	Depth	0.85 m
	Slab Depth	0.100 m
	Cover	75 mm

Beam Reinforcement		Dia	Number
Number of Top Bars	201 mm2	16	1
Number of Bottom Bars	201 mm2	16	1
Shear Stirrups	1 legs	10	600 mm c/c

AS1170.0 Factors	ψ_c	ψ_s	ψ_l	ψ_e
Floor Res	0.4	0.7	0.4	0.4
Roof	0	0.7	0	0

Other	
Ultimate Bearing Capacity at Base	200 kPa
Factor of Safety, ϕuls	2
Factor of Safety, ϕsls	3

Notes Checking Max Loading on Edge Beam.

Bearing Assessment		Allocation		System Loads G	Q	$S_{snow, ice}$	$W_{u, down}$	$W_{u, up}$	AS1170.0 Factors ψ_c	ψ_s	ψ_l	ψ_e
Loading	Beam Weight	1		6.25					1.0	1.0	1.0	0.3
	Slab Weight	1	m	2.45	1.50				0.4	0.7	0.4	0.3
	External Wall	2.42	m	1.70					1.0	1.0	1.0	0.3
	Internal Wall	0	m						1.0	1.0	1.0	0.3
	Midfloor 1	0	m						0.4	0.7	0.4	0.3
	Midfloor 2	0	m						0.4	0.7	0.4	0.3
	Roof 1	3.5	m	0.50	0.25	0.44	0.55	-1.11	0.0	0.7	0.0	0.3
	Roof 2	0	m						0.0	0.7	0.0	0.3
			m									

Additional Loading

Point Load (Roof)	4.2 kN
Point Load (Wall)	
Point Load (Wall$_2$)	
Point Load (Floor)	

Notes: Point Load Over Family Slider

Calculated Loads		Ultimate Limit State Load Cases 1.2G+1.5Q	1.4G	$1.2G+S_u+\psi Q$	$1.2G+W_u+\psi Q$	$0.9G+W_u$	$G+\psi_2 Q$	Servicibility Working Loads 1G+ψsQ	1(G+ψlQ)+Ss	1(G+ψlQ)+Ws	$0.9G+Ws_{up}$
	Rib Weight	7.50	8.75	7.50	7.50	5.62	6.25	6.25	6.25	6.25	5.62
	Slab Porportioned to Rib	5.19	3.43	3.54	3.54	2.21	2.90	3.50	3.05	2.90	2.21
	Wall 1	4.94	5.76	4.94	4.94	3.70	4.11	4.11	4.11	4.11	3.70
	Wall 2	0.00	0.00	0.00	0.00	0.00	0.00	0.00	0.00	0.00	0.00
	Midfloor 1	0.00	0.00	0.00	0.00	0.00	0.00	0.00	0.00	0.00	0.00
	Midfloor 2	0.00	0.00	0.00	0.00	0.00	0.00	0.00	0.00	0.00	0.00
	Roof 1	3.41	2.45	3.64	4.03	-2.31	2.01	2.36	2.83	3.00	-1.14
	Roof 2	0.00	0.00	0.00	0.00	0.00	0.00	0.00	0.00	0.00	0.00
	Additional User Load (kN)	4.20	3.02	4.48	4.95	-2.84	2.48	2.91	3.48	3.69	-1.41
		21.04	20.39	19.62	20.00	9.22	15.27	16.22	16.24	16.26	10.39
	Bearing Pressures	70 kPa	68 kPa	65 kPa	67 kPa	31 kPa	51 kPa	54 kPa	54 kPa	54 kPa	35 kPa
	Additional Bearing from User Load	14 kPa	10 kPa	15 kPa	17 kPa	-9 kPa	8 kPa	10 kPa	12 kPa	12 kPa	-5 kPa
	%ϕGUBC	84%	78%	80%	83%	21%	59%	96%	99%	100%	45%
		OK	OK	OK	OK	OK	OK	OK	OK	OK	OK

Summary

Beam Width	0.3 m		
Beam Depth	0.85 m		
Top 1 x	D 16		
Bottom 1 x	D 16		
Stirrups	D 10	@600mm c/c	

Bearing	
ULT Bearing Pressure	70 kPa
SLS Bearing Pressure	54 kPa
ULT Bearing Pressure (Inc. PL)	84 kPa
SLS Bearing Pressure (Inc. PL)	67 kPa

Comments Conservative as the point load will not be applied at the same time as the Full m of Brick veneer and the 5.25m roof Load.

Building Consent 170037
Received 20/2/17

Consent Issued BC170037

3.2 - FOUNDATION CALCULATION (ii)

WAIMAKARIRI DISTRICT COUNCIL
Plans and specifications APPROVED in accordance with the Building Act 2004, clause 49 and the Building Regulations 1992, Clause 3
170037 13/03/2017 petert

STRIP FOOTING — Bearing Check

Beam Details		
Select Trial Sizes	Width	0.30 m
	Depth	0.85 m
	Slab Depth	0.100 m
	Cover	75 mm

Beam Reinforcement		Dia	Number
Number of Top Bars	201 mm2	16	1
Number of Bottom Bars	201 mm2	16	1
Shear Stirrups	1 legs	10	600 mm c/c

AS1170.0 Factors	ψ_c	ψ_s	ψ_l	ψ_e
Floor Res	0.4	0.7	0.4	0.4
Roof	0	0.7	0	0

Other	
Ultimate Bearing Capacity at Base	200 kPa
Factor of Safety, ϕuls	2
Factor of Safety, ϕsls	3

Notes Checking Max Loading on Edge Beam.

Bearing Assessment		Allocation		System Loads G	Q	$S_{snow,ice}$	$W_{u,down}$	$W_{u,up}$	AS1170.0 Factors ψ_c	ψ_s	ψ_l	ψ_e
Loading	Beam Weight	1		6.25					1.0	1.0	1.0	0.3
	Slab Weight	1	m	2.45	1.50				0.4	0.7	0.4	0.3
	External Wall	2.42	m	1.70					1.0	1.0	1.0	0.3
	Internal Wall	0	m						1.0	1.0	1.0	0.3
	Midfloor 1	0	m						0.4	0.7	0.4	0.3
	Midfloor 2	0	m						0.4	0.7	0.4	0.3
	Roof 1	5.25	m	0.50	0.25	0.44	0.55	-1.11	0.0	0.7	0.0	0.3
	Roof 2	0	m						0.0	0.7	0.0	0.3
			m									

Additional Loading

Point Load (Roof)	2.0 kN
Point Load (Wall)	
Point Load (Wall>)	
Point Load (Floor)	

Notes: Nominal Point Load from Windows etc.

Calculated Loads		Ultimate Limit State Load Cases 1.2G+1.5Q	1.4G	$1.2G+S_u+\psi_l Q$	$1.2G+W_u+\psi_l Q$	$0.9G+W_u$	$G+\psi_c Q$	Serviceability Working Loads $1G+\psi_s Q$	$1(G+\psi_l Q)+Ss$	$1(G+\psi_l Q)+Ws$	$0.9G+Ws_{up}$
Rib Weight		7.50	8.75	7.50	7.50	5.62	6.25	6.25	6.25	6.25	5.62
Slab Porportioned to Rib		5.19	3.43	3.54	3.54	2.21	2.90	3.50	3.05	2.90	2.21
Wall 1		4.94	5.76	4.94	4.94	3.70	4.11	4.11	4.11	4.11	3.70
Wall 2		0.00	0.00	0.00	0.00	0.00	0.00	0.00	0.00	0.00	0.00
Midfloor 1		0.00	0.00	0.00	0.00	0.00	0.00	0.00	0.00	0.00	0.00
Midfloor 2		0.00	0.00	0.00	0.00	0.00	0.00	0.00	0.00	0.00	0.00
Roof 1		5.12	3.68	5.47	6.04	-3.47	3.02	3.54	4.25	4.50	-1.72
Roof 2		0.00	0.00	0.00	0.00	0.00	0.00	0.00	0.00	0.00	0.00
Additional User Load	(kN)	2.00	1.44	2.14	2.36	-1.35	1.18	1.38	1.66	1.76	-0.67
		22.74	21.61	21.44	22.01	8.07	16.28	17.41	17.66	17.76	9.81
Bearing Pressures		76 kPa	72 kPa	71 kPa	73 kPa	27 kPa	54 kPa	58 kPa	59 kPa	59 kPa	33 kPa
Additional Bearing from User Load		7 kPa	5 kPa	7 kPa	8 kPa	-5 kPa	4 kPa	5 kPa	6 kPa	6 kPa	-2 kPa
%ϕGUBC		82%	77%	79%	81%	22%	58%	94%	97%	98%	46%
		OK	OK	OK	OK	OK	OK	OK	OK	OK	OK

Summary

Beam Width	0.3 m		
Beam Depth	0.85 m		
Top 1 x	D 16		
Bottom 1 x	D 16		
Stirrups	D 10	@600mm c/c	

Bearing	
ULT Bearing Pressure	76 kPa
SLS Bearing Pressure	59 kPa
ULT Bearing Pressure (Inc. PL)	82 kPa
SLS Bearing Pressure (Inc. PL)	65 kPa

Comments Nominal Point Load is additional Loading to account for small windows lintels. With 5.25m roof span only this is a conservative design. Allowance has been made for 600mm deep foundation

SECTION 3

Truss Details & Bracing Details

(Include Fixings of Gib & Ecoply)

- Design IT Calcs
- Hyspan etc.

AS BUILT TRUSS LAYOUT
REQUIRED - This must be received by the Building Unit AT LEAST 10 WORKING DAYS PRIOR to the Structure Pre-Roof Pre-Wrap inspection.

Truss "As-Build" designs may be sent to Buildinginfo@wmk.govt.nz

Consent Issued BC170037

BC170037

Riccarton Branch
P.O.Box 2653
2-20 Mandeville St
Christchurch
Phone: 03 348 2039
Fax: 03 341 7057

WAIMAKARIRI DISTRICT COUNCIL
Plans and specifications APPROVED in accordance with the Building Act 2004, clause 49 and the Building Regulations 1992, Clause 3
170037 13/03/2017 petert

Date: 16 December 2016

Fabricator: **PlaceMakers Riccarton**

Customer Name: Stonewood Homes

Job Name: 153232 Baldock Residence

Job Number: 16-00119837

Territorial Authority Name: WDC

Building Consent No: **170037**

(To be provided by the City/District Council)

Attn: **Territorial Authority**
Environmental Services Unit

We have been engaged to provide the trusses for the above project and have enclosed the Buildable truss layout and Producer Statement to allow completion of the consent application. On advice from the building project owner, the structure will be designed under the following parameters.
The truss layout includes lintels supporting girder trusses and slab thickening details required for truss point loads.

Wind Zone: High

Snow Load (ground): 0.9 Kpa.

Roof Material: Light

Truss timber treatment: H1.2 treated minimum

We can advise that the following will be provided at the time of truss manufacture to both the building owner and your office:

1: A full as-built truss layout and Producer Statement
2: Specific truss/truss and truss/top plate fixing details indicated on the truss layout
3: Top plate to stud connections and Lintel fixings will be indicated on the truss or frame layout

Acknowledgement of this letter, along with the Building Consent number, by fax to our office, would be appreciated.

Regards

Truss Department
PlaceMakers Riccarton

AS BUILT TRUSS LAYOUT
REQUIRED - This must be received by the Building Unit AT LEAST 10 WORKING DAYS PRIOR to the Structure Pre-Roof Pre-Wrap inspection.

Truss "As-Build" designs may be sent to Buildinginfo@wmk.govt.nz

MiTek New Zealand Limited

Consent Issued BC170037

BC170037

Correspondence from : **AUCKLAND**
40 Neales Road, East Tamaki 2013
PO Box 58-014, Botany 2163
Phone: 09 274 7109
Fax: 09 274 7100

CHRISTCHURCH
14 Pilkington Way, Wigram 8042
PO Box 8387, Riccarton 8440
Phone: 03 348 8691
Fax: 03 348 0314

www.miteknz.co.nz

MiTek 20/20 Engineering 4.6.6.323

Printed: 11:58:35 16 Dec 2016

PRODUCER STATEMENT for MiTek 20/20® TRUSS DESIGN - Version 4.6

ISSUED BY: **MiTek New Zealand Limited**

TO: **PlaceMakers - Frame and Truss**

IN RESPECT OF: **MiTek® Truss Designs**

WAIMAKARIRI DISTRICT COUNCIL
Plans and specifications APPROVED in accordance with the Building Act 2004, clause 49 and the Building Regulations 1992, Clause 3
170037 13/03/2017 petert

This producer statement covers the MiTek 20/20® truss design and the structural performance of the GANG-NAIL® connector plate for the job reference **00119837** and may be used by a Building Consent Authority to assist in determining compliance with the New Zealand Building Code.

The MiTek 20/20® truss design program has been developed by MiTek New Zealand Limited for the design of MiTek® timber roof, floor and attic trusses in New Zealand. The truss designs computed by MiTek 20/20 ® are prepared using sound and widely accepted engineering principles, and in accordance with compliance documents of the New Zealand Building Code and Verification Method B1/VM1; and internationally accepted standard ANSI/TPI 1 - 2002 as an alternative solution, to satisfy the requirements of Clauses B1 and B2 of the New Zealand Building Code.

On behalf of MiTek New Zealand Limited, and subject to:

i) All proprietary products meeting their performance specification requirements
ii) The provision of adequate roof bracing and overall building stability
iii) Correct selection and placement of GANG-NAIL connector plates
iv) Correct input of Truss Design Data as shown in the Fabricator Design Statement for this job
v) The design being undertaken by the accredited fabricator under the terms of the software licence
vi) Timber is graded to the requirements of NZS 3603:1993
vii) Minimum timber treatment for these MiTek® trusses shall be in accordance with B2/AS1 Table 1A and the relevant sections of NZS 3602:2003

I believe on reasonable grounds that the trusses, if constructed in accordance with the MiTek 20/20® truss design and shop drawings, will comply with the relevant provisions of the New Zealand Building Code.

MiTek New Zealand Limited holds a current policy of Professional Indemnity Insurance no less than $500,000.

On behalf of MiTek New Zealand Limited, **Date: Friday, 16 December 2016**

In Ling Ng, BE (Hons), CPEng, IntPE, MIPENZ (ID: 146585)
TECHNICAL SERVICES MANAGER, MiTek New Zealand Limited

AS BUILT TRUSS LAYOUT
REQUIRED - This must be received by the Building Unit AT LEAST 10 WORKING DAYS PRIOR to the Structure Pre-Roof Pre-Wrap inspection.

Truss "As-Build" designs may be sent to Buildinginfo@wmk.govt.nz

Job: 00119837
Client: Stonewood Homes
Site: 153232 Baldock Residence
Lot 40
Elm Green-Rangiora
Description: 153232 Baldock Residence
Building Consent No.:
MiTek 20/20 Engineering 4.6.6.323
Consent Issued BC170037
BC170037
Printed: 11:58:35 16 Dec 2016

MITEK FABRICATOR DESIGN STATEMENT

This statement is issued by MiTek accredited fabricator **PlaceMakers - Frame and Truss**, being licensed to use the MiTek 20/20® software, to the client listed above and may be used by the Building Consent Authority to assist in determining compliance with the New Zealand Building Code.

MiTek 20/20® TRUSS DESIGN DATA

The MiTek 20/20® computer design for this job is based on the following design parameters entered into the program. The Fabricator shall ensure that these job details are current and relevant to the project for the design of the MiTek ® trusses.

Job Details

Importance Level : 2

Design Working Life : 50 years

Roof Truss

Timber Group: CTF NZO

Pitch: 25.000 deg

Nominal Overhang: 600 mm

Roof
- Material: Metal Tiles
- Dead Load: 0.210 kPa
- Restraints: 370 mm centres
- Live Load: Qur = 0.250 kPa, Qc = 1.100 kN

Ceiling
- Material: Gib Board 13mm
- Dead Load: 0.200 kPa
- Restraints: 1800 mm centres
- Live Load: Qc = 1.400 kN

Wind
- Area: High (44.0 m/s)
- Pressure Coeff: Cpe = varies; Cpi = -0.30, 0.20

Snow
- Location: Christchurch (N4) at 100 m
- Open Ground Load: 0.900 kPa
- Basic Roof Load: 0.441 kPa

The minimum timber treatment for these MiTek® trusses shall be in accordance with B2/AS1 Table 1A and the relevant sections of NZS 3602:2003. The timber for these MiTek® trusses shall be graded to the requirements of NZS 3603:1993. Proprietary fixings and timber connectors shall be selected in accordance with NZS3604:2011 Section 4 - Durability.

MiTek® Truss List

Legend: * = detail only, ? = input only, ~~Txx~~ = failed design, Ø = non certified, Unmarked trusses = designed successfully, LB = lateral bracing required
GB = gable brace required, CF = Chemical Free Treatment

Roof Truss

Treatment: Top Chords - H1.2 Bottom Chords - H1.2 Webs - H1.2

Truss	Qty	Span (mm)	Pitch (deg)	Spacing (mm)	Truss	Qty	Span (mm)	Pitch (deg)	Spacing (mm)	Truss	Qty	Span (mm)	Pitch (deg)	Spacing (mm)
*HB01	2	7780	18.249	900	J07C	1	1745	25.000	900	*R09A	1	1675	25.000	900
*HB02	1	3675	18.249	900	J07D	1	1745	25.000	900	*R10	1	6980	25.000	600
*HB03	1	2897	18.249	900	J07E	1	1745	25.000	900	*R11	10	1455	0.000	740
*HB04	2	5122	18.249	900	J08	1	2862	25.000	900	*R12	2	1455	0.000	600
*HB05	2	4874	18.249	900	J08A	1	2862	25.000	900	T01	4	9880	25.000	900
J01	1	3117	25.000	900	J08B	1	2862	25.000	900	T02	1	5780	25.000	900
J01A	1	3117	25.000	900	J09	1	1962	25.000	900	T03	3	5818	25.000	900
J01B	1	3117	25.000	900	J09A	1	1962	25.000	900	T04	1	5770	25.000	900
J02	1	2217	25.000	900	J09B	1	1962	25.000	900	T05	4	5418	25.000	900
J02A	1	2217	25.000	900	J09C	1	1962	25.000	900	TG01	1	9880	25.000	900
J03	1	1317	25.000	900	*R01	1	840	25.000	900	TG02	1	9880	25.000	900
J03A	1	1317	25.000	900	*R02	1	1330	25.000	900	TG03	1	6120	25.000	900
J04	1	3517	25.000	900	*R03	4	913	25.000	900	TR01	1	9880	25.000	900
J04A	1	3517	25.000	900	*R03A	3	913	25.000	900	TR02	1	9880	25.000	900
J04B	1	3517	25.000	900	*R04	1	1536	25.000	900	V01	1	4720	25.000	900
J05	1	2617	25.000	900	*R05	1	1430	25.000	900	V02	1	3535	25.000	900
J05A	1	2617	25.000	900	*R06	3	913	25.000	900	V03	1	1735	25.000	900
J06	1	1717	25.000	900	*R06A	2	913	25.000	900	V04	1	2255	25.000	900
J06A	1	1717	25.000	900	*R07	1	1428	25.000	900	V05	1	1355	25.000	900
J07	1	1745	25.000	900	*R08	1	1458	25.000	900	V06	1	2164	25.000	900
J07A	1	1745	25.000	900	*R08A	1	1458	25.000	900	V07	1	1264	25.000	900
J07B	1	1745	25.000	900	*R09	1	1675	25.000	900					

Roof Truss quantity : 94

Total quantity : 94

WAIMAKARIRI DISTRICT COUNCIL
Plans and specifications APPROVED in accordance with the Building Act 2004, clause 49 and the Building Regulations 1992, Clause 3
170037 13/03/2017 petert

AS BUILT TRUSS LAYOUT
REQUIRED - This must be received by the Building Unit AT LEAST 10 WORKING DAYS PRIOR to the Structure Pre-Roof Pre-Wrap inspection.

Truss "As-Build" designs may be sent to Buildinginfo@wmk.govt.nz

The computer design input has been carried out by:

Signed: J Smith .....

Date: ...Friday, 16 December 2016....

Name of Detailer: Jerry Smith.....

Qualifications and Title: Frame & Truss Detailer

On behalf of: PlaceMakers - Frame and Truss

Job: 00119837
Client: Stonewood Homes
Site: 153232 Baldock Residence
Lot 40
Elm Green-Rangiora
Phone:
Description: 153232 Baldock Residence
Building Consent No.:
MiTek 20/20 Engineering 4.6.6.323
Printed: 11:56:42 16 Dec 2016

Consent Issued BC170037

BC170037

TRUSS BEARINGS EXCEEDING 10KN REPORT - Ultimate Limit State Loads

MiTek® Truss List

Legend: ? = input only, ~~Txx~~ = failed design, Ø = non certified, Unmarked trusses = designed successfully

Critical Trusses	Qty	Span (mm)	Joint	Bearing Reactions (kN) Down	Uplift
TG01	1	9880	L	10.903	8.633
TG02	1	9880	B	10.142	7.556
TG03	1	6120	B	13.349	9.698
			E	15.198	10.615

WAIMAKARIRI DISTRICT COUNCIL
Plans and specifications APPROVED in accordance with the Building Act 2004, clause 49 and the Building Regulations 1992, Clause 3
170037 13/03/2017 petert

Note:

1) Select appropriate Slab Thickening Detail from the MiTek 'Internal Load Bearing On Concrete Floor Slabs' brochure.

Job: 00119837
Client: Stonewood Homes
Site: 153232 Baldock Residence
Lot 40
Elm Green-Rangiora
Description: 153232 Baldock Residence
Building Consent No.:
MiTek 20/20 Engineering 4.6.6.323
Consent Issued BC170037
BC170037
Printed: 11:57:50 16 Dec 2016

TRUSS FIXING SELECTION REPORT - Characteristic Loads

Fixings are selected from the LUMBERLOK Brochure 08/2014 (Timber Connectors Characteristic Loadings Data)

MiTek® Truss List

Legend: * = detail only, ? = input only, ~~Txx~~ = failed design, Ø = non certified, Unmarked trusses = designed successfully

Truss	Qty	Span (mm)	Joint	Down (kN)	Uplift (kN)	Bearing	Fixing Qty	Fixing Selected	
*HB01	2	7780							Refer NZS3604:2011 Tables 15.6
*HB02	1	3675							Refer NZS3604:2011 Tables 15.6
*HB03	1	2897							Refer NZS3604:2011 Tables 15.6
*HB04	2	5122							Refer NZS3604:2011 Tables 15.6
*HB05	2	4874							Refer NZS3604:2011 Tables 15.6
J01	1	3117	B	10.181	4.928	Cross	1	CT200 pair	
			G	7.422	4.629	Butt	1	Pair of MultiGrips	
			E	0.495	0.362	Butt	1	Pair of 3.15d Nails	
			D	2.021	1.353	Cross	1	Pair of Wire Dog Staples	
J01A	1	3117	B	5.275	2.163	Cross	1	Pair of Wire Dog Staples	
			H	3.484	2.262	Butt	1	JH 47x90	
J01B	1	3117	B	4.338	1.225	Cross	1	Pair of Wire Dog Staples	
			F	3.107	1.948	Butt	1	JH 47x90	
J02	1	2217	B	3.546	1.346	Cross	1	Pair of Wire Dog Staples	
			F	1.381	0.977	Butt	1	JH 47x90	
J02A	1	2217	B	3.452	0.894	Cross	1	Pair of Wire Dog Staples	
			F	2.141	1.379	Butt	1	JH 47x90	
J03	1	1317	B	2.421	0.599	Cross	1	Pair of Wire Dog Staples	
			F	0.838	0.350	Butt	1	Pair of 3.15d Nails	
J03A	1	1317	B	2.622	0.568	Cross	1	Pair of Wire Dog Staples	
			D	1.120	0.805	Butt	1	Pair of 3.15d Nails	
J04	1	3517	A	3.560	1.049	Cross	1	Pair of Wire Dog Staples	
			H	2.654	1.543	Butt	1	JH 47x90	
			E	0.515	0.363	Butt	1	Pair of 3.15d Nails	
			D	2.003	1.382	Cross	1	Pair of Wire Dog Staples	
J04A	1	3517	B	6.060	2.534	Cross	1	Pair of Wire Dog Staples	
			H	4.713	3.022	Butt	1	JH 47x90	
J04B	1	3517	B	4.738	1.373	Cross	1	Pair of Wire Dog Staples	
			H	3.530	2.201	Butt	1	JH 47x90	
J05	1	2617	B	4.215	1.702	Cross	1	Pair of Wire Dog Staples	
			F	2.139	1.455	Butt	1	JH 47x90	
J05A	1	2617	B	3.842	1.041	Cross	1	Pair of Wire Dog Staples	
			F	2.574	1.632	Butt	1	JH 47x90	
J06	1	1717	B	2.673	0.823	Cross	1	Pair of Wire Dog Staples	
			F	0.884	0.527	Butt	1	Pair of 3.15d Nails	
J06A	1	1717	B	2.979	0.712	Cross	1	Pair of Wire Dog Staples	
			F	1.586	1.061	Butt	1	JH 47x90	
J07	1	1745	B	2.896	0.432	Cross	1	Pair of Wire Dog Staples	
			G	0.974	0.497	Butt	1	Pair of 3.15d Nails	
			E	0.529	0.383	Butt	1	Pair of 3.15d Nails	
			D	1.980	1.307	Cross	1	Pair of Wire Dog Staples	
J07A	1	1745	B	2.896	0.432	Cross	1	Pair of Wire Dog Staples	
			G	0.974	0.497	Butt	1	Pair of 3.15d Nails	
			E	0.529	0.383	Butt	1	Pair of 3.15d Nails	
			D	1.980	1.307	Cross	1	Pair of Wire Dog Staples	
J07B	1	1745	B	3.004	0.722	Cross	1	Pair of Wire Dog Staples	
			F	1.618	1.079	Butt	1	JH 47x90	
J07C	1	1745	B	2.704	0.833	Cross	1	Pair of Wire Dog Staples	
			F	0.907	0.544	Butt	1	Pair of 3.15d Nails	
J07D	1	1745	B	2.704	0.833	Cross	1	Pair of Wire Dog Staples	
			F	0.907	0.544	Butt	1	Pair of 3.15d Nails	
J07E	1	1745	B	3.004	0.722	Cross	1	Pair of Wire Dog Staples	
			F	1.618	1.079	Butt	1	JH 47x90	
J08	1	2862	B	4.593	1.877	Cross	1	Pair of Wire Dog Staples	
			F	2.675	1.800	Butt	1	JH 47x90	
J08A	1	2862	B	4.593	1.877	Cross	1	Pair of Wire Dog Staples	
			F	2.675	1.800	Butt	1	JH 47x90	
J08B	1	2862	B	4.084	1.131	Cross	1	Pair of Wire Dog Staples	
			F	2.836	1.787	Butt	1	JH 47x90	
J09	1	1962	B	2.877	0.948	Cross	1	Pair of Wire Dog Staples	
			E	1.098	0.646	Butt	1	Pair of 3.15d Nails	
J09A	1	1962	B	2.877	0.948	Cross	1	Pair of Wire Dog Staples	
			E	1.098	0.646	Butt	1	Pair of 3.15d Nails	
J09B	1	1962	B	3.208	0.801	Cross	1	Pair of Wire Dog Staples	
			F	1.861	1.217	Butt	1	JH 47x90	
J09C	1	1962	B	3.208	0.801	Cross	1	Pair of Wire Dog Staples	
			F	1.861	1.217	Butt	1	JH 47x90	
*R01	1	840							Refer NZS3604:2011 Tables 15.6
*R02	1	1330							Refer NZS3604:2011 Tables 15.6
*R03	4	913							Refer NZS3604:2011 Tables 15.6
*R03A	3	913							Refer NZS3604:2011 Tables 15.6
*R04	1	1536							Refer NZS3604:2011 Tables 15.6
*R05	1	1430							Refer NZS3604:2011 Tables 15.6
*R06	3	913							Refer NZS3604:2011 Tables 15.6
*R06A	2	913							Refer NZS3604:2011 Tables 15.6
*R07	1	1428							Refer NZS3604:2011 Tables 15.6
*R08	1	1458							Refer NZS3604:2011 Tables 15.6
*R08A	1	1458							Refer NZS3604:2011 Tables 15.6

WAIMAKARIRI DISTRICT COUNCIL
Plans and specifications APPROVED in accordance with the Building Act 2004, clause 49 and the Building Regulations 1992, Clause 3
170037 13/03/2017 petert

PlaceMakers - Frame and Truss

Job: 00119837
Client: Stonewood Homes
Site: 153232 Baldock Residence Lot 40 Elm Green-Rangiora
Phone:
Description: 153232 Baldock Residence
Building Consent No.:
MiTek 20/20 Engineering 4.6.6.323
Printed: 12:34:01 Limited
Printed: 11:57:50 16 Dec 2016

Consent Issued BC170037

BC170037

Truss	Qty	Span (mm)	Joint	Down (kN)	Uplift (kN)	Bearing	Fixing Qty	Fixing Selected
*R09	1	1675						Refer NZS3604:2011 Tables 15.6
*R09A	1	1675						Refer NZS3604:2011 Tables 15.6
*R10	1	6980						Refer NZS3604:2011 Tables 15.6
*R11	10	1455						Refer NZS3604:2011 Tables 15.6
*R12	2	1455						Refer NZS3604:2011 Tables 15.6
T01	4	9880	A	5.397	2.914	Butt	4	JH 47x90
			L	4.995	3.556	Cross	4	CT200 pair
			H	6.883	3.469	Cross	4	CT200 pair
T02	1	5780	B	5.588	2.946	Cross	1	Pair of Wire Dog Staples
			F	5.588	2.946	Cross	1	Pair of Wire Dog Staples
T03	3	5818	A	4.745	2.893	Butt	3	JH 47x90
			E	5.638	2.958	Cross	3	Pair of Wire Dog Staples
T04	1	5770	B	9.165	5.379	Cross	1	CT200 pair
			F	9.165	5.379	Cross	1	CT200 pair
T05	4	5418	F	4.916	2.578	Cross	4	Pair of Wire Dog Staples
			I	4.549	2.845	Cross	4	Pair of Wire Dog Staples
TG01	1	9880	L	17.036	10.791	Cross	1	16kN Truss to Top Plate
			G	13.586	8.006	Cross	1	CT200 pair
TG02	1	9880	B	15.846	9.444	Cross	1	CT200 pair
			I	12.587	7.346	Cross	1	CT200 pair
TG03	1	6120	B	20.858	12.123	Cross	1	16kN Truss to Top Plate
			E	23.747	13.269	Cross	1	16kN Truss to Top Plate
TR01	1	9880	A	8.061	4.939	Butt	1	Pair of MultiGrips
			H	8.911	5.000	Cross	1	CT200 pair
TR02	1	9880	A	2.240	1.160	Butt	1	JH 47x90
			M	10.660	6.654	Cross	1	CT200 pair
			H	4.497	2.125	Cross	1	Pair of Wire Dog Staples
V01	1	4720	A			Wide		No fixing selected
V02	1	3535	A			Wide		No fixing selected
V03	1	1735	A			Wide		No fixing selected
V04	1	2255	A			Wide		No fixing selected
			E	0.534	0.373	Butt	1	Pair of 3.15d Nails
			D	1.901	1.320	Cross	1	Pair of Wire Dog Staples
V05	1	1355	A			Wide		No fixing selected
			C	0.636	0.443	Butt	1	Pair of 3.15d Nails
V06	1	2164	A			Wide		No fixing selected
			D	0.644	0.447	Butt	1	Pair of 3.15d Nails
V07	1	1264	A			Wide		No fixing selected

WAIMAKARIRI DISTRICT COUNCIL
Plans and specifications APPROVED in accordance with the Building Act 2004, clause 49 and the Building Regulations 1992, Clause 3
170037 13/03/2017 petert

Fixing List

Qty	Selected Fixing
16	CT200 pair
2	Pair of MultiGrips
16	Pair of 3.15d Nails
45	Pair of Wire Dog Staples
25	JH 47x90
3	16kN Truss to Top Plate
7	No fixing selected

Note:
1) Fixings have been selected based on loading only. Please check that selected fixings are practical for each situation and that appropriate nailing can be applied on site.
2) Fixings are selected from the LUMBERLOK Brochure 08/2014 (Timber Connectors Characteristic Loadings Data) with down and uplift characteristic loads of at least the values shown for each joint.

Consent Issued BC170037

BC170037

Job No: 16-00119837
Job Name: 153232 Baldock Residence

Client: Stonewood Homes
Building Consent No:

Site: Lot 40 Elm Green-Rangiora

DESIGN STATEMENT
MiTek Beam Program v1.10 June 2011

Certification of MiTek Beam Program v1.10 June 2011

The MiTek Beam Program v1.10 June 2011 has been developed by MiTek New Zealand Ltd for the design of these beams: Timber, Glulam, GANGLAM and GANG-NAIL FLITCH BEAMS. The beam designs calculated by this program are prepared using sound and widely accepted engineering principles, and in accordance with Compliance Documents of the New Zealand Building Code and Verification Method B1/VM1 to satisfy the requirements of Clause B1 of the Building Code. We believe on reasonable grounds that these beams for the proposed building, if constructed in accordance with the drawings, specifications and other documents provided will comply with the relevant provisions of the NZ Building Code. This is subject to all proprietary products meeting their performance specification requirements; the provision of adequate bracing and fixings; and the correct input of design data carried out by suitably trained personnel. This document may be used by the Building Consent Authority to assist in determining compliance with the New Zealand Building Code.

Summary of MiTek Beam Program v1.10 June 2011 Data and Output

Roof
Weight: light + ceiling
Dead Load: 0.45 kPa
Live Load: 0.25 kPa

Wind
Area/Speed: high (44.0 m/s)

Snow
Area: 0.441 kPa

Wall
Type: NA

Floor
Live Load: NA

Beam List

Opening Label	Beam Material	Beam Size	Beam Length	Design Status	Opening Label	Beam Material	Beam Size	Beam Length	Design Status
D1	MSG8/VSG8	2/140x45	1175	OKAY					
W1	MSG8/VSG8	2/140x45	915	OKAY					
W2	MSG8/VSG8	2/140x45	915	OKAY					
W3	MSG8/VSG8	2/140x45	915	OKAY					
W4	MSG8/VSG8	2/140x45	915	OKAY					
W5	MSG8/VSG8	2/140x45	915	OKAY					
D3	MSG8/VSG8	2/140x45	945	OKAY					
W6	MSG8/VSG8	2/140x45	1515	OKAY					
W7	MSG8/VSG8	2/240x45	1515	OKAY					
W8	MSG8/VSG8	2/140x45	1515	OKAY					
W9	MSG8/VSG8	2/90x45	765	OKAY					
W10	MSG8/VSG8	2/140x45	915	OKAY					
W11	MSG8/VSG8	2/190x45	1815	OKAY					
D4	MSG8/VSG8	2/240x45	2415	OKAY					
D5	MSG8/VSG8	2/240x45	3015	OKAY					
	MSG8/VSG8	2/240x45	3015	OKAY					
W12	MSG8/VSG8	2/140x45	915	OKAY					
W13	MSG8/VSG8	2/140x45	1515	OKAY					
	MSG8/VSG8	2/140x45	915	OKAY					
B1	MSG8/VSG8	2/240x45	1060	OKAY					
B2	MSG8/VSG8	2/240x45	1700	OKAY					

WAIMAKARIRI DISTRICT COUNCIL
Plans and specifications APPROVED in accordance with the Building Act 2004, clause 49 and the Building Regulations 1992, Clause 3
170037 13/03/2017 petert

GANGLAM plating details indicated with RD (regular duty plating), HD (heavy duty plating) and SHD (super heavy duty plating)

The design input has been carried out by:

Signed:……

Date: 16/12/2016

Name of Computer Operator:

Qualifications and Title:

Company:

MiTek Beam v1.10 June 2011

Date: Friday, 16 December 2016
Job Number 16-00119837
Job Name 153232 Baldock Residence
Client Stonewood Homes
Calculated By

Roof Weight light + ceiling
Wind Zone high (44.0 m/s)
Snow Load 0.441 kPa

Beam Details

Beam Label	D1	W1	W2	W3	W4	W5	D3	W6	W7	W8
Beam Span (mm)	1175	915	915	915	915	915	945	1515	1515	1515
Roof Span "S" (mm)	900	2217	1317	3117	5818	5818	980	5780	9880	5418
Overhang (mm)	600	600	600	600	600	600	600	600	600	600
Wall Type										
Wall Height (mm)										
Floor Live load	NA	NA	NA	NA	NA	NA	NA	NA	NA	NA
Floor Span "F" (mm)										

MiTek Bearing Reactions

Not in use in this version

Point Load 1										
Girder Span (mm)		2217							9880	
Setback (mm)		1317							3517	
Location (mm)		545							200	
Point Load 2										
Girder Span (mm)										
Setback (mm)										
Location (mm)										
Point Load 3										
Girder Span (mm)										
Setback (mm)										
Location (mm)										

Beam Status	OKAY	OKAY	OKAY	OKAY	OKAY	OKAY	OKAY	OKAY	OKAY	OKAY
Beam Material	MSG8/VSG8	MSG8/VSG8	MSG8/VSG8	MSG8/VSG8	MSG8/VSG8	MSG8/VSG8	MSG8/VSG8	MSG8/VSG8	MSG8/VSG8	MSG8/VSG8
Beam Size	2/140x45	2/140x45	2/140x45	2/140x45	2/140x45	2/140x45	2/140x45	2/140x45	2/240x45	2/140x45
Beam Deflection	0.17mm	0.17mm	0.07mm	0.13mm	0.21mm	0.21mm	0.07mm	1.56mm	0.81mm	1.48mm
Beam Length	1175	915	915	915	915	915	945	1515	1515	1515

Consent Issued BC170037

WAIMAKARIRI DISTRICT COUNCIL
Plans and specifications APPROVED in accordance
with the Building Act 2004, clause 49 and the Building
Regulations 1992, Clause 3
170037 13/03/2017 petert

BC170037

MiTek Beam v1.10 June 2011

Date: Friday, 16 December 2016
Job Number 16-00119837
Job Name 153232 Baldock Residence
Client Stonewood Homes
Calculated By

Roof Weight light + ceiling
Wind Zone high (44.0 m/s)
Snow Load 0.441 kPa

Beam Details

Beam Label	W9	W10	W11	D4	D5	D6	W12	W13	W14	B1
Beam Span (mm)	765	915	1815	2415	3015	3015	915	1515	915	1060
Roof Span "S" (mm)	1962	2862	2862	5770	3517	2617	900	1745	1745	1745
Overhang (mm)	600	600	600	600	600	600	600	600	600	600
Wall Type										
Wall Height (mm)										
Floor Live load	NA	NA	NA	NA	NA	NA	NA	NA	NA	NA
Floor Span "F" (mm)										

MiTek Bearing Reactions

Not in use in this version

Point Load 1										
Girder Span (mm)		2862	2862	5770	3517	2617				
Setback (mm)		1962	1962	2862	2617	1717				
Location (mm)		687	1080	2260	2200	1365				
Point Load 2										
Girder Span (mm)										
Setback (mm)										
Location (mm)										
Point Load 3										
Girder Span (mm)										
Setback (mm)										
Location (mm)										
Beam Status	OKAY	OKAY	OKAY	OKAY	OKAY	OKAY	OKAY	OKAY	OKAY	OKAY
Beam Material	MSG8/VSG8	MSG8/VSG8	MSG8/VSG8	MSG8/VSG8	MSG8/VSG8	MSG8/VSG8	MSG8/VSG8	MSG8/VSG8	MSG8/VSG8	MSG8/VSG8
Beam Size	2/90x45	2/140x45	2/190x45	2/240x45	2/240x45	2/240x45	2/140x45	2/140x45	2/140x45	2/240x45
Beam Deflection	0.17mm	0.22mm	2.96mm	2.3mm	4.53mm	3.48mm	0.06mm	0.66mm	0.09mm	0.03mm
Beam Length	765	915	1815	2415	3015	3015	915	1515	915	1060

Consent Issued BC170037

WAIMAKARIRI DISTRICT COUNCIL
Plans and specifications APPROVED in accordance
with the Building Act 2004, clause 49 and the Building
Regulations 1992, Clause 3
170037 13/03/2017 petert

BC170037

MiTek Beam v1.10 June 2011

Date:	Friday, 16 December 2016
Job Number	16-00119837
Job Name	153232 Baldock Residence
Client	Stonewood Homes
Calculated By	
Roof Weight	light + ceiling
Wind Zone	high (44.0 m/s)
Snow Load	0.441 kPa

Beam Details

Beam Label	B2
Beam Span (mm)	1700
Roof Span "S" (mm)	6120
Overhang (mm)	600
Wall Type	
Wall Height (mm)	
Floor Live load	NA
Floor Span "F" (mm)	

MiTek Bearing Reactions

Not in use in this version

Point Load 1	
Girder Span (mm)	6120
Setback (mm)	11580
Location (mm)	1600
Point Load 2	
Girder Span (mm)	
Setback (mm)	
Location (mm)	
Point Load 3	
Girder Span (mm)	
Setback (mm)	
Location (mm)	
Beam Status	**OKAY**
Beam Material	MSG8/VSG8
Beam Size	2/240x45
Beam Deflection	0.93mm
Beam Length	1700

Consent Issued BC170037

WAIMAKARIRI DISTRICT COUNCIL
Plans and specifications APPROVED in accordance with the Building Act 2004, clause 49 and the Building Regulations 1992, Clause 3
170037 13/03/2017 petert

BC170037

BC170037

Consent Issued BC170037

AS BUILT TRUSS LAYOUT
REQUIRED - This must be received by the Building Unit AT LEAST 10 WORKING DAYS PRIOR to the Structure Pre-Roof Pre-Wrap inspection.

Truss "As-Build" designs may be sent to Buildinginfo@wmk.govt.nz

Layout Is Null And Void If Trusses Not Supplied By PlaceMakers

WAIMAKARIRI DISTRICT COUNCIL
Plans and specifications APPROVED in accordance with the Building Act 2004, clause 49 and the Building Regulations 1992, Clause 3
170037 13/03/2017 petert

AS BUILT TRUSS LAYOUT
REQUIRED - This must be received by the Building Unit AT LEAST 10 WORKING DAYS PRIOR to the Structure Pre-Roof Pre-Wrap inspection.

Truss "As-Build" designs may be sent to Buildinginfo@wmk.govt.nz

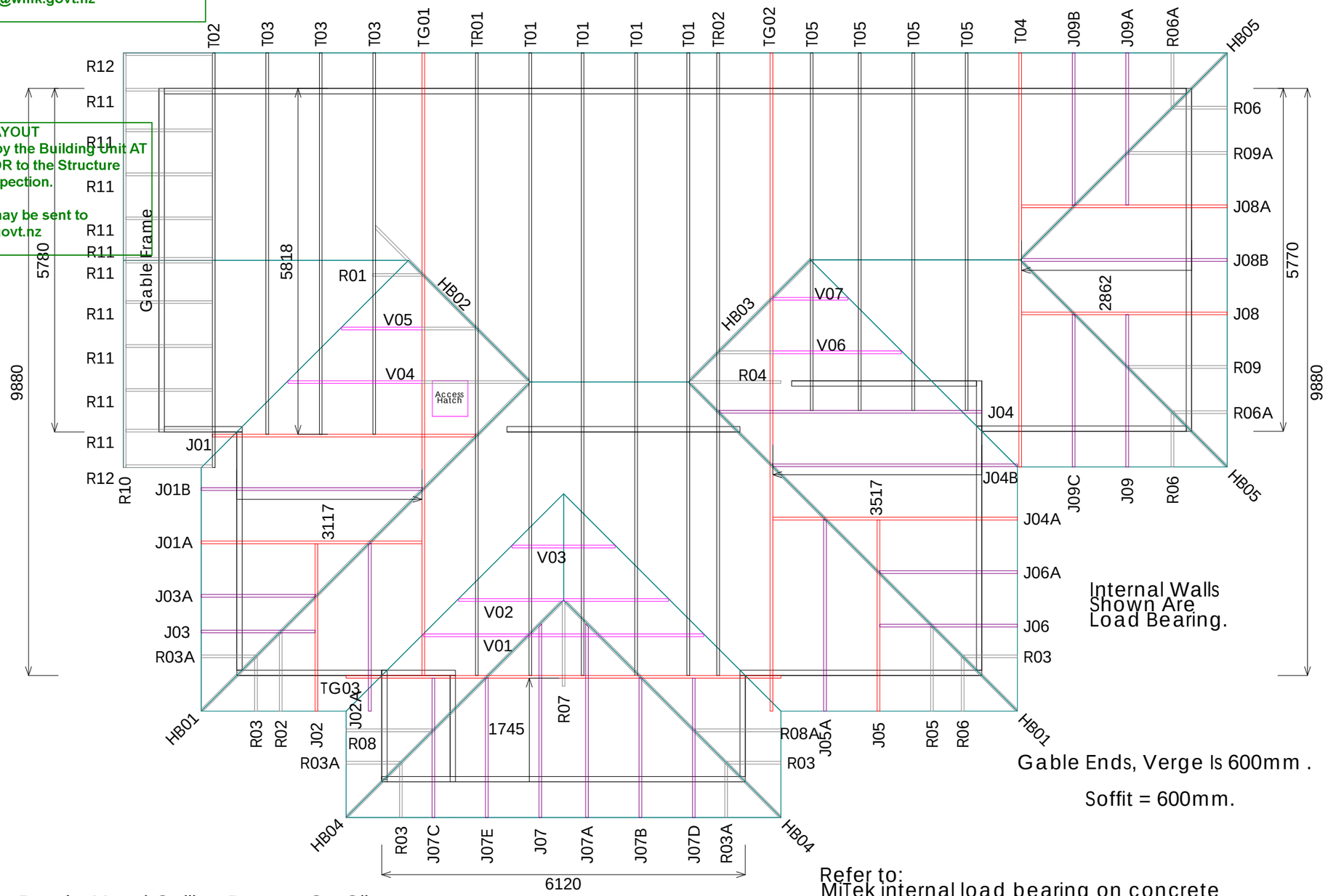

Internal Walls Shown Are Load Bearing.

Gable Ends, Verge Is 600mm .

Soffit = 600mm.

Rondo Metal Ceiling Battens On Clip Trusses Need Bottom Chord Restraints @ 1800 ctrs Maximum .

Refer to:
MiTek internal load bearing on concrete floor slabs brochure 10/2011.
Slab thickening details are for floor slabs on buildings complying with NZS 3604:2011.
(all other foundations by others).

PlaceMakers® Know how. Can do.

Site Address :
153232 Baldock Residence
Lot 40
Elm Green-Rangiora

Sheet Title :
For Building Consent
Buildable Truss Layout

Date : 16 Dec,2016 | Drawn : Jerry Smith
Scale : 1: 75 | System : MiTek 20/20

Job Details:

Roof Pitch	: 25.00deg	Truss Centres	: 900mm
Roof Material	: Metal Tiles	Roof Live Load	: 0.250kPa
Ceiling Material	: Gib Board 13mm	Floor Live Load	:
Wind Zone	: High	Wind Speed	: 44m/s
Roof Snow Load	: 0.441kPa	Overhang	: 600mm

PrimeCad v4.6.6.323

MiTek™

Job Title : 00119837
Sheet : 1
Revision Number :

BC170037

Slab Thickening Details

AS BUILT TRUSS LAYOUT
REQUIRED - This must be received by the Building Unit AT LEAST 10 WORKING DAYS PRIOR to the Structure Pre-Roof Pre-Wrap inspection.

Truss "As-Build" designs may be sent to Buildinginfo@wmk.govt.nz

Consent Issued BC170037

Layout Is Null And Void If Trusses Not Supplied By PlaceMakers

WAIMAKARIRI DISTRICT COUNCIL
Plans and specifications APPROVED in accordance with the Building Act 2004, clause 49 and the Building Regulations 1992, Clause 3
170037 13/03/2017 petert

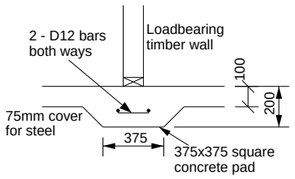

TYPE FP1 - 375x375mm Pad

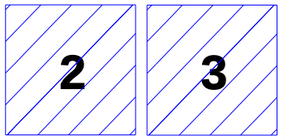

Number of Understuds

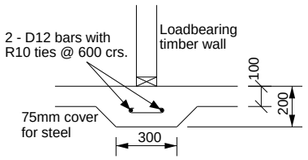

TYPE FS1 - 300mm Strip footing

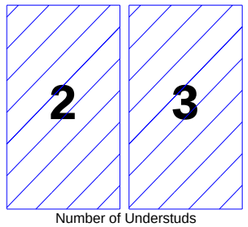

Number of Understuds

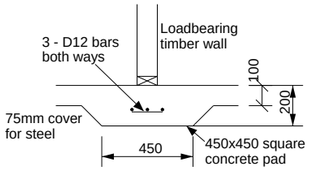

TYPE FP2 - 450x450mm Pad

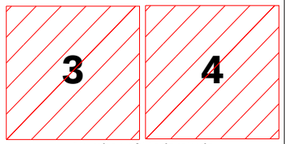

Number of Understuds

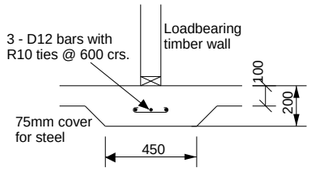

TYPE FS2 - 450mm Strip footing

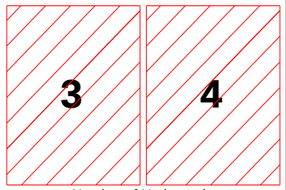

Number of Understuds

NOTES:

The numbers found within the hatched area are the number of studs required below each truss.
Refer to:
GANG-NAIL Internal Load Bearing on Concrete Floor Slabs brochure 10/2011

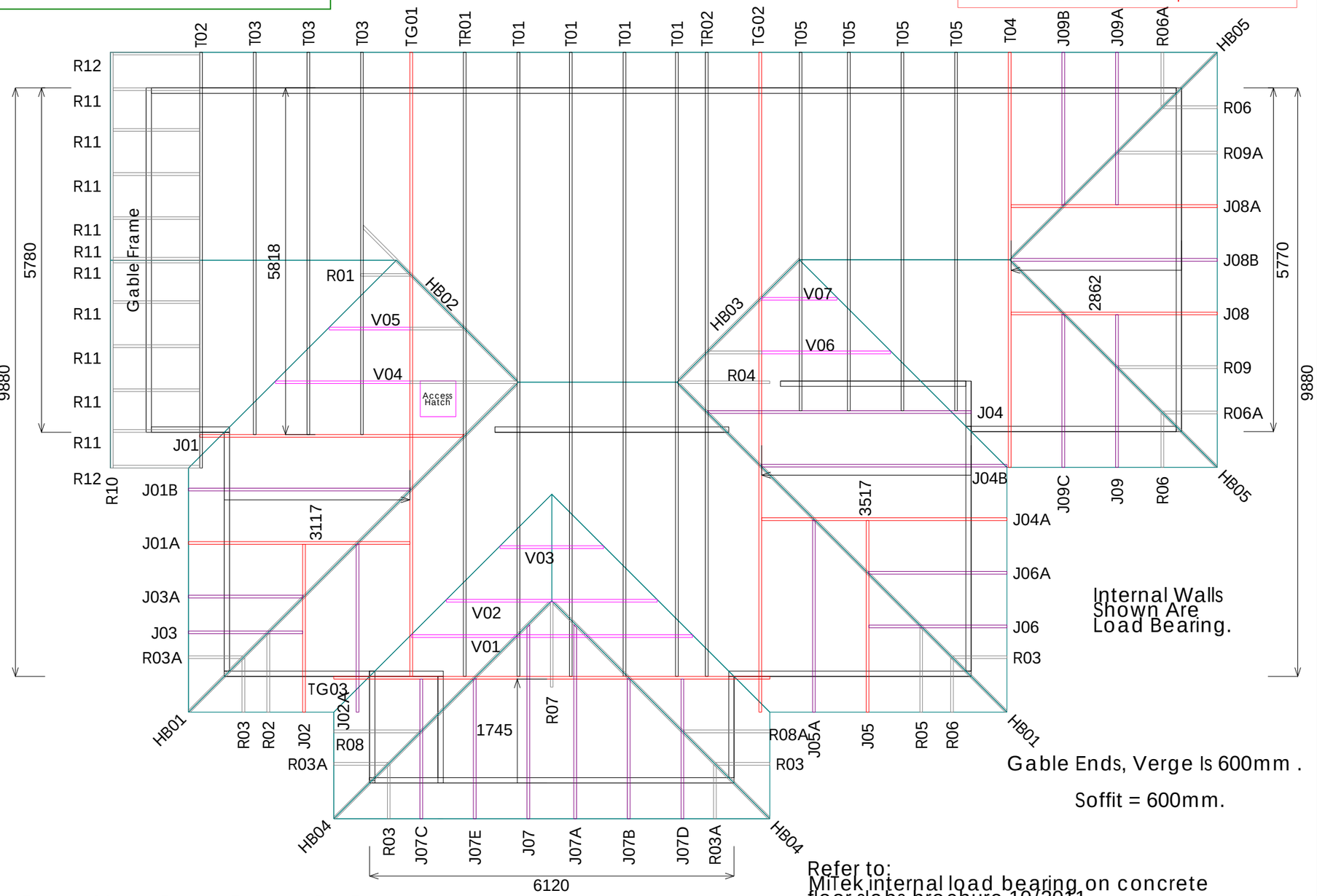

Internal Walls Shown Are Load Bearing.

Gable Ends, Verge Is 600mm .

Soffit = 600mm.

Rondo Metal Ceiling Battens On Clip Trusses Need Bottom Chord Restraints @ 1800 ctrs Maximum .

Refer to:
MiTek internal load bearing on concrete floor slabs brochure 10/2011.
Slab thickening details are for floor slabs on buildings complying with NZS 3604:2011.
(all other foundations by others).

NO SLAB THICKENING REQUIRED

PlaceMakers® Know how. Can do.

Site Address :
153232 Baldock Residence
Lot 40
Elm Green-Rangiora

Sheet Title :
For Building Consent
Slab Thickening

Date : 16 Dec,2016 | Drawn : Jerry Smith
Scale : 1: 75 | System : MiTek 20/20

Job Details:

Roof Pitch	: 25.00deg	Truss Centres	: 900mm
Roof Material	: Metal Tiles	Roof Live Load	: 0.250kPa
Ceiling Material	: Gib Board 13mm	Floor Live Load	:
Wind Zone	: High	Wind Speed	: 44m/s
Roof Snow Load	: 0.441kPa	Overhang	: 600mm

PrimeCad v4.6.6.323

MiTek™

Job Title : 00119837
Sheet : 2
Revision Number :

Consent Issued BC170037

WAIMAKARIRI DISTRICT COUNCIL
Plans and specifications APPROVED in accordance with the Building Act 2004, clause 49 and the Building Regulations 1992, Clause 3
170037 13/03/2017 petert

Lintel Fixing Details

TYPE E 1.4kN

TYPE F 4.0kN

TYPE G 7.5kN

TYPE H 13.5kN

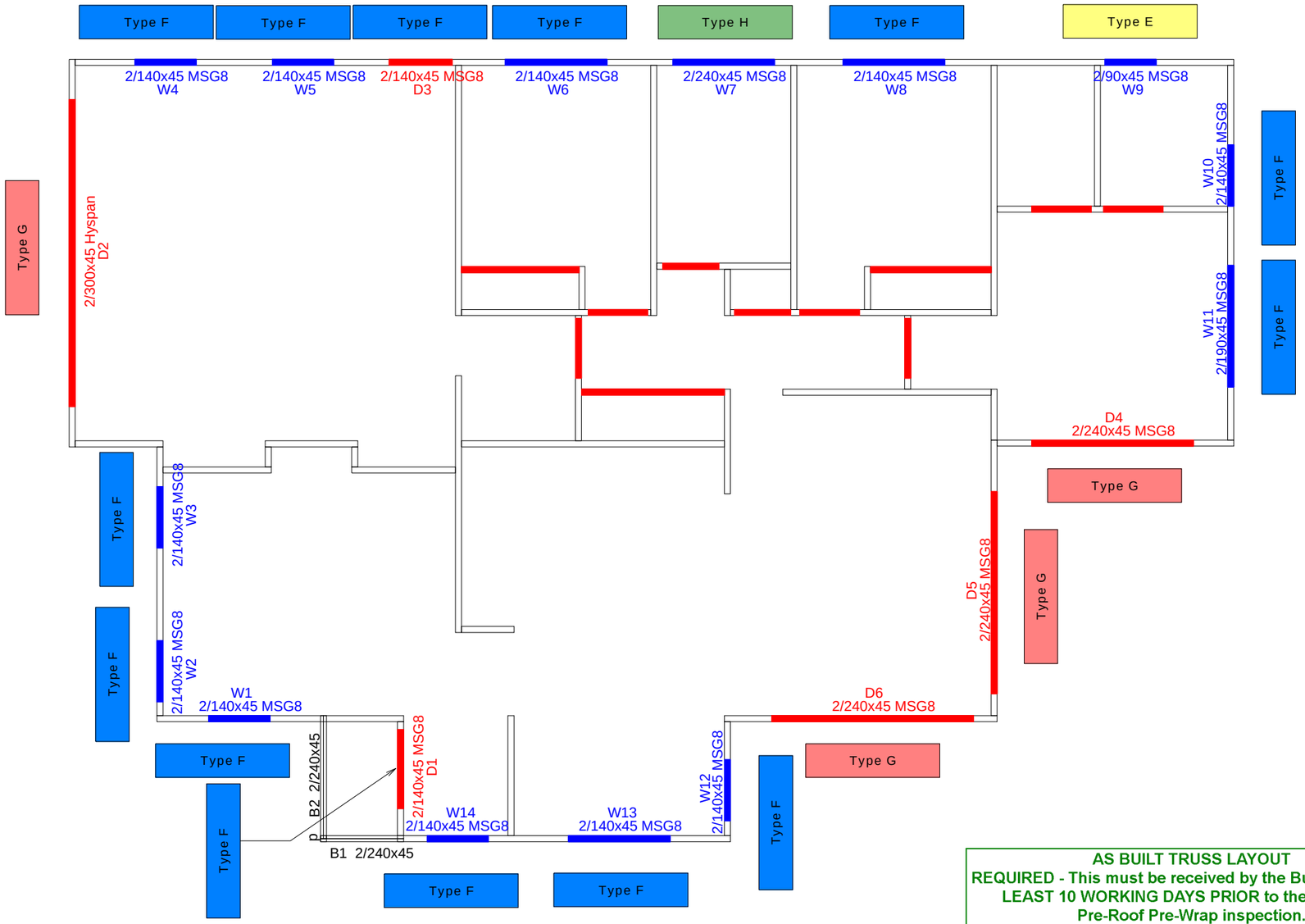

NOTES:

Refer to:
Lintel Fixing Schedule 10/2011 pages 68 & 69, Structrual Fixings On-site Guide for Buildng Code Compliance 2012 Edition

(Alternative to NZS 3604:2011 Table 8.14 & Figure 8.12)

AS BUILT TRUSS LAYOUT REQUIRED - This must be received by the Building Unit AT LEAST 10 WORKING DAYS PRIOR to the Structure Pre-Roof Pre-Wrap inspection.

Truss "As-Build" designs may be sent to Buildinginfo@wmk.govt.nz

PlaceMakers® Know how. Can do.

Site Address :
153232 Baldock Residence
Lot 40
Elm Green-Rangiora

Sheet Title :
For Building Consent
Lintel Type & Lintel Fixing

Date : 16 Dec,2016 | Drawn : Jerry Smith
Scale : 1: 75 | System : MiTek 20/20

Job Details:

Roof Pitch	: 25.00deg	Truss Centres	: 900mm
Roof Material	: Metal Tiles	Roof Live Load	: 0.250kPa
Ceiling Material	: Gib Board 13mm	Floor Live Load	:
Wind Zone	: High	Wind Speed	: 44m/s
Roof Snow Load	: 0.441kPa	Overhang	: 600mm

PrimeCad v4.6.6.323

MiTek™

Job Title : 00119837
Sheet : 3
Revision Number :

Consent Issued BC170037

Layout Is Null And Void If Trusses Not Supplied By PlaceMakers

WAIMAKARIRI DISTRICT COUNCIL
Plans and specifications APPROVED in accordance with the Building Act 2004, clause 49 and the Building Regulations 1992, Clause 3
170037 13/03/2017 petert

Stud to top plate fixing details

Type A is minimum fixing required unless specified otherwise

FIXING TYPE A
0.7kN

2/90x3.33 plain steel wire nails driven vertically into stud.

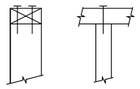

FIXING TYPE B
4.7kN

2 x 90mm x 3.15 dia. plain steel wire nails driven vertically into stud.

AND

Plus 2x LUMBERLOK CPC40

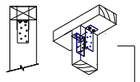

OR

Plus LUMBERLOK 6 kN Stud Anchor (CPC80)

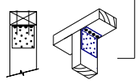

Recommended for internal wall options to avoid lining issues.

OR

Plus LUMBERLOK Stud Strap (One face only)

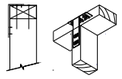

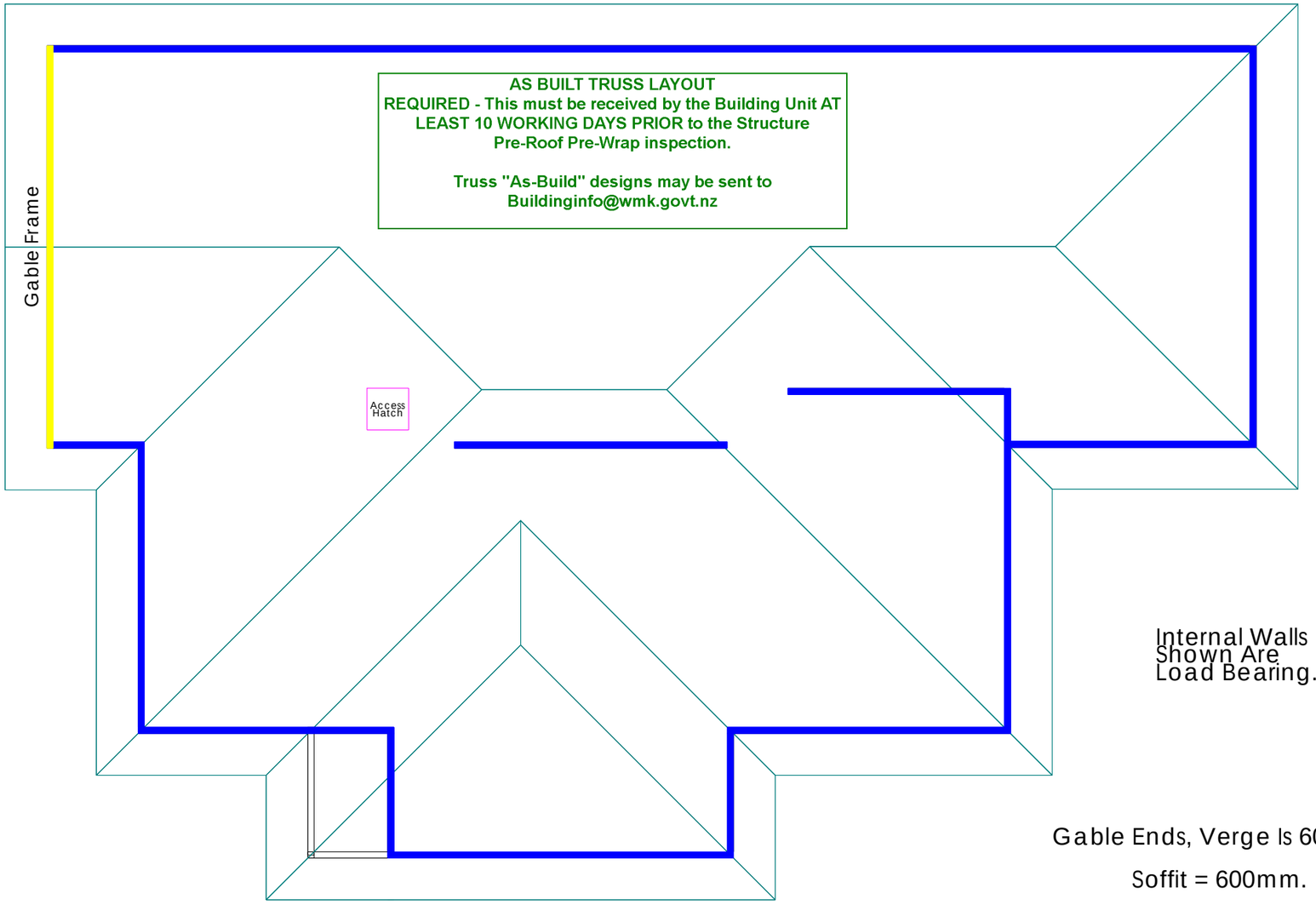

AS BUILT TRUSS LAYOUT
REQUIRED - This must be received by the Building Unit AT LEAST 10 WORKING DAYS PRIOR to the Structure Pre-Roof Pre-Wrap inspection.

Truss "As-Build" designs may be sent to Buildinginfo@wmk.govt.nz

Internal Walls Shown Are Load Bearing.

Gable Ends, Verge Is 600mm .

Soffit = 600mm.

NOTES:

Refer to:
LUMBERLOK Wall Fixing Chart - Stud to Top Plate Fixing Schedule 09/2011

(Alternative to NZS3604:2011 Table 8.18)

Rondo Metal Ceiling Battens On Clip Trusses Need Bottom Chord Restraints @ 1800 ctrs Maximum .

Refer to:
MiTek internal load bearing on concrete floor slabs brochure 10/2011.
Slab thickening details are for floor slabs on buildings complying with NZS 3604:2011.
(all other foundations by others).

PlaceMakers Know how. Can do.

Site Address :
153232 Baldock Residence
Lot 40
Elm Green-Rangiora

Sheet Title :
For Building Consent
Stud To Top Plate Fixing

Date : 16 Dec,2016 | Drawn : Jerry Smith
Scale : 1: 75 | System : MiTek 20/20

Job Details:

Roof Pitch	: 25.00deg	Truss Centres	: 900mm
Roof Material	: Metal Tiles	Roof Live Load	: 0.250kPa
Ceiling Material	: Gib Board 13mm	Floor Live Load	:
Wind Zone	: High	Wind Speed	: 44m/s
Roof Snow Load	: 0.441kPa	Overhang	: 600mm

PrimeCad v4.6.6.323

MiTek

Job Title : 00119837
Sheet : 4
Revision Number :

BC170037

Consent Issued BC170037

Layout Is Null And Void If Trusses Not Supplied By PlaceMakers

WAIMAKARIRI DISTRICT COUNCIL
Plans and specifications APPROVED in accordance with the Building Act 2004, clause 49 and the Building Regulations 1992, Clause 3
170037 13/03/2017 petert

Truss Fixings

- X - LUMBERLOK JH47x90 Joist Hanger
- Z - LUMBERLOK JH47x120 Joist Hanger
- P - LUMBERLOK JH47x190 Joist Hanger
- E - LUMBERLOK JH95x165 Joist Hanger
- O - Pair of LUMBERLOK CT200 Ceiling Ties
- H - LUMBERLOK CT400 Cyclone Tie
- B - LUMBERLOK CT600 Cyclone Tie
- M - Pair of LUMBERLOK Multi Grips
- NP - LUMBERLOK Nailon Plate
- N - LUMBERLOK N21 Diagonal Cleat
- W - Pair of LUMBERLOK CPC40 Cleats
- K - LUMBERLOK TTP 16kN Truss to Top Plate set
- G - LUMBERLOK TTP 9kN Truss to Top Plate set

Roof Bracing

Refer to:
LUMBERLOK Roof Bracing Specifications brochure 08/2006 for end fixing details.

The brace must be located such that it forms an angle of 45° ± 5° to the wall

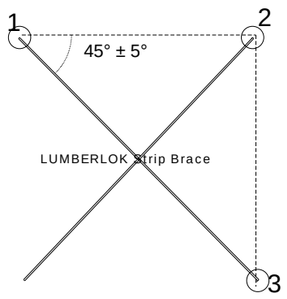

NOTES:

All other areas must have at the minimum 2/ 90x3.15mm skew nails + 2 wire dogs for truss to top plate connections.

Refer to:
LUMBERLOK Timber Connectors Characteristic Loadings Data brochure 03/4

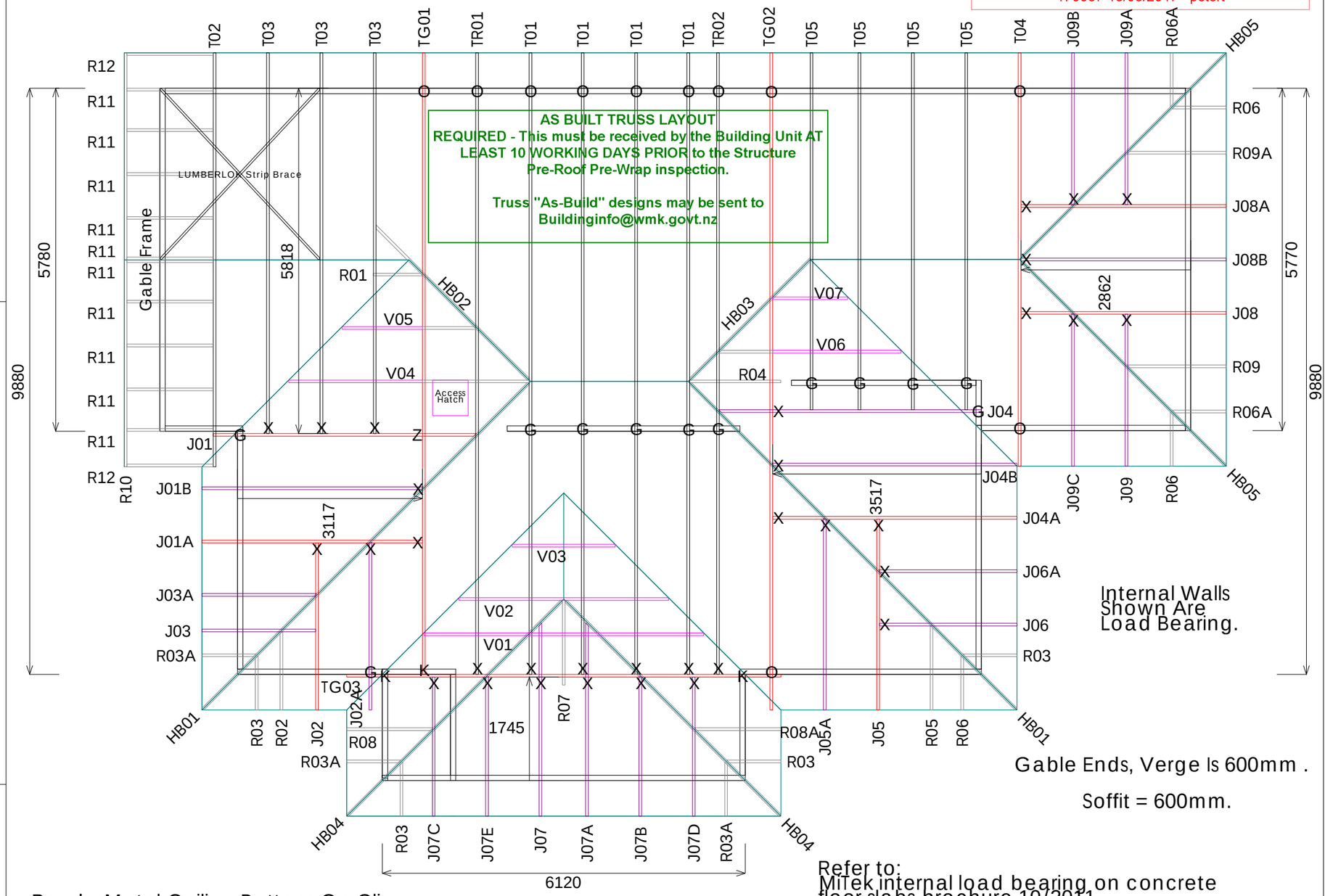

Internal Walls Shown Are Load Bearing.

Gable Ends, Verge Is 600mm .

Soffit = 600mm.

Rondo Metal Ceiling Battens On Clip
Trusses Need Bottom Chord Restraints
@ 1800 ctrs Maximum .

Refer to:
MiTek internal load bearing on concrete floor slabs brochure 10/2011.
Slab thickening details are for floor slabs on buildings complying with NZS 3604:2011.
(all other foundations by others).

PlaceMakers Know how. Can do.

Site Address :
153232 Baldock Residence
Lot 40
Elm Green-Rangiora

Sheet Title :
For Building Consent
Truss Fixings & Roof Bracing

Date : 16 Dec,2016 | Drawn : Jerry Smith
Scale : 1: 75 | System : MiTek 20/20

Job Details:

Roof Pitch	: 25.00deg	Truss Centres	: 900mm
Roof Material	: Metal Tiles	Roof Live Load	: 0.250kPa
Ceiling Material	: Gib Board 13mm	Floor Live Load	:
Wind Zone	: High	Wind Speed	: 44m/s
Roof Snow Load	: 0.441kPa	Overhang	: 600mm

PrimeCad v4.6.6.323

MiTek

Job Title : 00119837
Sheet : 5
Revision Number :

Consent Issued BC170037

LUMBERLOK®

LINTEL FIXING SCHEDULE

ALTERNATIVE TO TABLE 8.14 & FIGURE 8.12 NZS 3604:2011

WAIMAKARIRI DISTRICT COUNCIL
Plans and specifications APPROVED in accordance with the Building Act 2004, clause 49 and the Building Regulations 1992, Clause 3
170037 13/03/2017 petert

NOTE:

- ★ All fixings are designed for vertical loads only. Dead loads include the roof weight and standard ceiling weight of 0.20 kPa.
- ★ Refer to Table 8.19 NZS 3604:2011 for nailing schedule to resist horizontal loads.
- ★ These fixings assume the correct choice of rafter/truss to top plate connections have been made.
- ★ All fixings assume bottom plate thickness of 45mm maximum. Note: TYLOK options on timber species.
- ★ Wall framing arrangements under girder trusses are not covered in this schedule.
- ★ All timber selections are as per NZS 3604:2011

DEFINITIONS

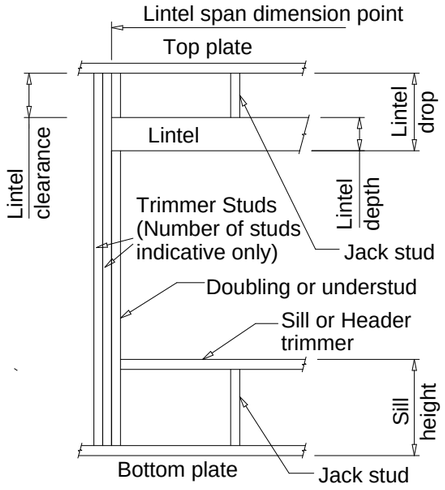

Lintel Supporting Girder Trusses:

Roof Tributary Area	Light Roof Wind Zone L, M, H	Light Roof Wind Zone VH	Light Roof Wind Zone EH	Heavy Roof Wind Zone L, M, H	Heavy Roof Wind Zone VH	Heavy Roof Wind Zone EH
8.6 m²	G	G	H	G	G	H
11.6 m²	G	H	H	G	G	H
12.1 m²	G	H	H	G	H	H
15.3 m²	H	H	-	G	H	H
19.1 m²	H	-	-	G	H	-
20.9 m²	H	-	-	H	H	-
21.8 m²	H	-	-	H	-	-
34.3 m²	-	-	-	H	-	-

Notes:
1) Roof Tributary Area = approx. 1/2 x (Total roof area on girder and rafter trusses supported by Lintel)
2) Assumed girder truss is at mid-span or middle third span of lintel
3) Use similar fixings for both ends of lintel
4) All other cases require specific engineering design.

SELECTION CHART FOR LINTEL FIXING

Lintel Span	Loaded Dimension (See Fig. 1.3 NZS 3604:2011)	Light Roof Wind Zone L	M	H	VH	EH	Heavy Roof Wind Zone L	M	H	VH	EH
0.7	2.0	E	E	E	E	F	E	E	E	E	E
	3.0	E	E	E	F	F	E	E	E	E	F
	4.0	E	E	F	F	F	E	E	E	F	F
	5.0	E	F	F	F	G	E	E	F	F	F
	6.0	E	F	F	G	G	E	E	F	F	G
0.9	2.0	E	E	E	F	F	E	E	E	E	F
	3.0	E	E	F	F	F	E	E	E	F	F
	4.0	E	E	F	F	F	E	E	F	F	F
	5.0	E	F	F	F	G	E	E	F	F	F
	6.0	E	F	F	G	G	E	E	F	F	G
1.0	2.0	E	E	E	F	F	E	E	E	E	F
	3.0	E	E	F	F	F	E	E	E	F	F
	4.0	E	F	F	F	G	E	E	F	F	F
	5.0	E	F	F	G	G	E	E	F	F	G
	6.0	E	F	F	G	G	E	E	F	F	G
1.2	2.0	E	E	F	F	F	E	E	E	F	F
	3.0	E	E	F	F	F	E	E	F	F	F
	4.0	E	F	F	G	G	E	E	F	F	G
	5.0	E	F	F	G	G	E	E	F	F	G
	6.0	F	F	G	G	H	E	E	F	G	G
1.5	2.0	E	E	F	F	F	E	E	E	F	F
	3.0	E	F	F	F	G	E	E	F	F	F
	4.0	E	F	F	G	G	E	E	F	F	G
	5.0	F	F	G	G	H	E	E	F	G	G
	6.0	F	F	G	H	H	E	E	F	G	H
2.0	2.0	E	F	F	F	G	E	E	F	F	F
	3.0	E	F	F	G	G	E	E	F	F	G
	4.0	F	F	G	G	H	E	E	F	G	G
	5.0	F	F	G	H	H	E	E	F	G	H
	6.0	F	G	G	H	H	E	F	G	H	H
2.4	2.0	E	F	F	G	G	E	E	F	F	G
	3.0	F	F	G	G	H	E	E	F	G	G
	4.0	F	F	G	H	H	E	E	F	G	H
	5.0	F	G	G	H	H	E	F	G	H	H
	6.0	F	G	H	H	-	E	F	G	H	H
3.0	2.0	E	F	F			E	E	F	F	G
	3.0	F	F	G	H	H	E	E	F	G	H
	4.0	F	G	G	H	H	E	F	G	H	H
	5.0	F	G	H	H	-	E	F	G	H	H
	6.0	F	G	H	-	-	E	F	G	H	-
3.6	2.0	F	F	G	G	H	E	E	F	G	G
	3.0	F	F	G	H	H	E	F	G	G	H
	4.0	F	G	H	H	-	E	F	G	H	H
	5.0	F	G	H	-	-	E	F	G	H	-
	6.0	G	H	H	-	-	E	F	H	-	-
4.2	2.0	F	F	G	G	H	E	E	F	G	G
	3.0	F	G	H	H	-	E	F	G	H	H
	4.0	F	G	H	-	-	E	F	G	H	-
	5.0	G	H	H	-	-	E	F	H	-	-
	6.0	G	H	-	-	-	E	F	H	-	-
4.5	2.0	F	F	G	H	H	E	E	F	G	H
	3.0	F	G	H	H	-	E	F	G	H	H
	3.4	F	G	H	H	-	E	F	G	H	-
	4.0	F	G	H	-	-	E	F	G	H	-
	5.0	G	H	-	-	-	E	F	H	-	-
	6.0	G	H	-	-	-	E	F	H	-	-
4.8	2.0	F	F	G	H	H	E	E	F	G	H
	3.0	F	G	H	H	-	E	F	G	H	H
	3.2	F	G	H	H	-	E	F	G	H	-
	4.0	F	G	H	-	-	E	F	H	H	-
	5.0	G	H	-	-	-	E	F	H	-	-
	6.0	G	H	-	-	-	E	F	H	-	-

LINTEL FIXING OPTIONS

TYPE E 1.4kN

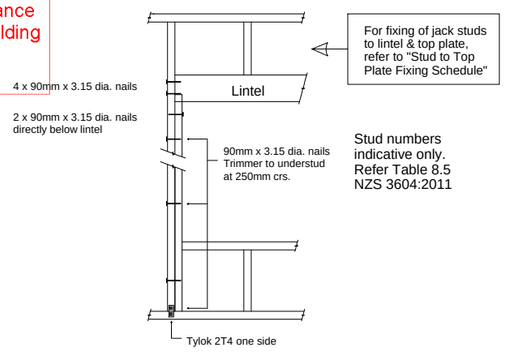

TYPE F 4.0kN

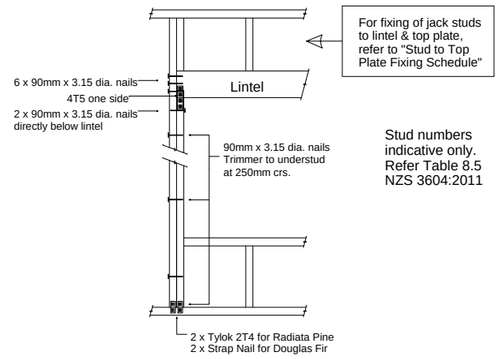

TYPE G 7.5kN

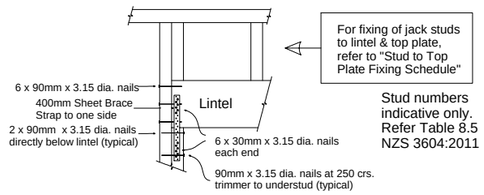

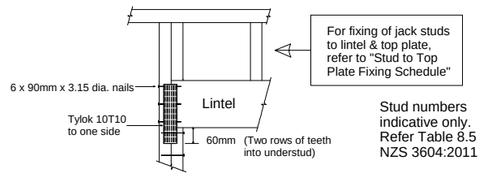

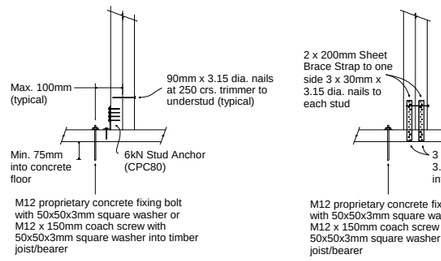

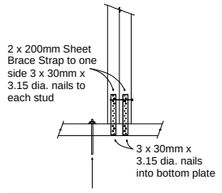

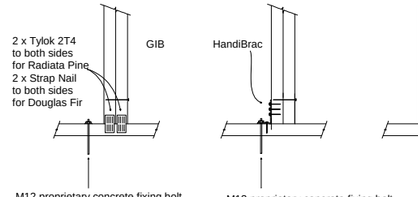

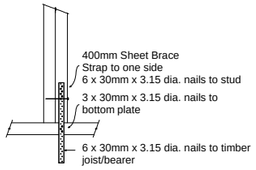

TYPE H 13.5kN

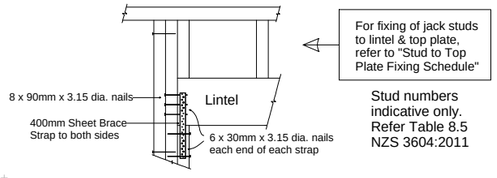

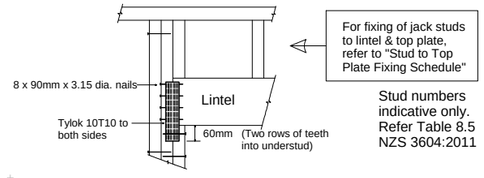

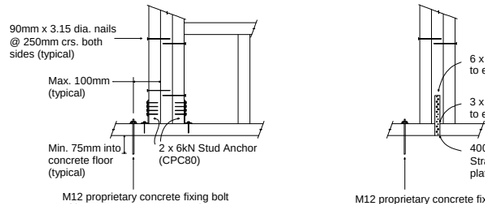

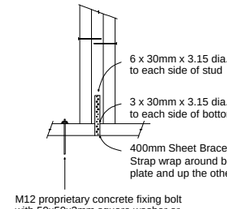

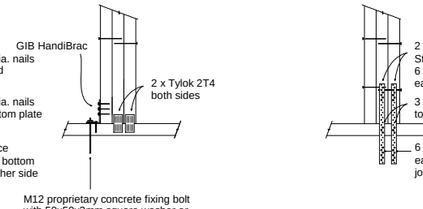

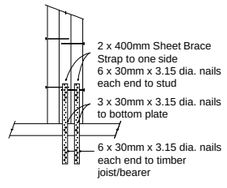

MiTek New Zealand Limited
AUCKLAND
PO Box 58-014, Botany 2163
Phone: 09-274 7109
Fax: 09-274 7100
CHRISTCHURCH
PO Box 8387, Riccarton 8440
Phone: 03-348 8691
Fax: 03-348 0314
www.miteknz.co.nz
GANG-NAIL® LUMBERLOK® BOWMAC®

© Copyright 2010 MiTek Holdings, Inc.
All rights reserved.

Design Certificate – Technical basis for structural design methodology contained in designIT for houses - New Zealand.

designIT for houses, New Zealand has been developed by experienced timber engineers to assist designers in selecting appropriate sizes of structural laminated veneer lumber products manufactured by Carter Holt Harvey (including hySPAN, hy90, hyONE and hyJOIST) and other generic stress grades of timber, to be used as structural elements for the construction of buildings that fall within the scope of NZS 3604.

The design methodology used for the software complies with the loading and general design requirements contained within AS/NZS 1170 and with timber structural design in accordance with NZS 3603:1993 including Amendment 4 (Verification method B1/VM1, 6.1).

designIT relies on the accurate input of span and loading information by the user. Where accurate inputs are submitted the product and/or stress grade and the size given will comply with the structural requirements of the New Zealand Building Code (NZBC), provided the installation is in accordance with the installation requirements provided by designIT and/or in product literature and/or NZS 3604, or specific engineering design, as appropriate.

Futurebuild LVL and Laserframe components, when used and treated to the required treatment levels prescribed in NZS 3602 and NZS 3604, as modified by Acceptable Solution B2/AS1, will comply with the requirements of the NZBC (Acceptable Solution B2/AS1, 3.2).

References:

AS 1720.1 – 2010 Timber structures. Part 1: Design methods
NZS 3603:1993 Timber Structures Standard.
NZS 3604:2011 Timber-framed buildings.
NZS 3602:2003 Timber and Wood-based products for Use in Building
AS 1684.1 – 1999 Residential timber framed construction. Part 1: Design criteria.
AS/NZS 1170:2002 Structural design actions, Parts 0 and 1.
AS/NZS 1170:2011 Structural design actions, Part 2: Wind actions.
AS/NZS 1170:2003 Structural design actions, Part 3: Snow and ice actions.

This Design Certificate, and any associated warranty/certification, is void where there has been substitution of alternate products not detailed within the Member Specification.

Version date: 15 September 2016

For further information or advice please contact:

Carter Holt Harvey Woodproducts New Zealand
173 Captain Springs Road, Onehunga. Auckland
Telephone 0800 808 131
Facsimile 0800 808 132
Email: designit@chhwoodproducts.co.nz

Specifier details:

Specifier:	PlaceMakers	
Business name:	Fletcher Distribution Group	
Address:		
Email:		
Phone:	**Mobile:**	**Facsimile:**

Project & Site details:

Project:	16-00119837 - 153232 Baldock Residence	**Ref. no.:** 153232
At (address):	Lot 40 Elm Green-Rangiora	
For (owner/s):	Baldock Residence	
Wind zone:	High	
Snow loading	Snow Region: N4, Altitude: 100 m (sub-alpine), Ground snow load, Sg [1,2] = 0.9 kPa	

1. designIT does not include any allowance for the effects of drifting and sliding of snow.
2. Snow loads are applied to roofed over structures only, the design of exposed floors/decks are not covered by designIT.

WAIMAKARIRI DISTRICT COUNCIL
Plans and specifications APPROVED in accordance with the Building Act 2004, clause 49 and the Building Regulations 1992, Clause 3
170037 13/03/2017 petert

MEMBER DESIGN DETAILS

Member 1

1) Member code and description D2 Garage - Lintels - In single or upper storey load bearing walls

2) Date prepared 16/12/2016

3) Serviceability criteria AS 1720.1-2010 and AS 1684.1-1999

4) Design inputs

Span	4.6 m
Roof load width 'RLW'	1.6 m
Roof type and mass	Light roof & ceiling - 40 kg/m²
Roof snow load	0.6 kPa, snow overhang 0.1 kN/m (μ_i=0.7, C_e=1.0, k = 0.5)

5) Member specification

Size, stress grade/product	Use 2/300 x 45 hySPAN
Material type	Structural Laminated Veneer Lumber to AS/NZS 4357

6) Serviceability

Load case	Limit [3] on average deflection [2]	Estimated average deflection [2]	Rigidity ratio [4]
Long term load - $G+\psi_L Q$ *	10.0 mm	3.4 mm (long term)	$\frac{10.0}{3.4} = 2.9$
*Critical serviceability load case			

See 'Notes for interpretation of serviceability data' at the end of this report

7) Reactions

Load case	k_1 [1]	Limit states design reaction [2,3] End [4] kN
1.35G	0.60	-2.6
1.2G + 1.5Q	0.80	-4.4
$1.2G + S_U + \Psi_C Q$	0.80	-5.0
$1.2G + W_U + \Psi_C Q$	1.00	-4.9
$0.9G + W_U$	1.00	3.3

See 'Notes for interpretation of reaction data' at the end of this report

WAIMAKARIRI DISTRICT COUNCIL
Plans and specifications APPROVED in accordance with the Building Act 2004, clause 49 and the Building
Regulations 1992, Clause 3
170037 13/03/2017 petert

8) Installation requirements

Provide at least 30 mm bearing at end supports
Vertical lamination in accordance with Detail H1.

Notes for interpretation of serviceability data

1. "average deflection" is an engineering concept based upon a notional estimated load, notional member rigidity and, in some cases, an approximate model of material response to environmental conditions. These parameters are, 'standardised' in AS/NZS 1170, AS 1684.1 and AS 1720. Deflections calculated using this methodology cannot therefore be usefully compared with deflections calculated using other methods, eg GLTAA design methodology.

2. Deflection is the flexural response to load – 'out-of-level' measurements of installations are not necessarily deflections and can incorporate 'initial out-of-straightness', whether intended or not. Furthermore, loads can be higher/lower than the notional estimate and in any comparison with measured levels, material variability needs to also be considered. AS 1720 gives the following basis for estimation of upper bound deflections for various materials.

No 1 Framing – visually graded to NZS 3631	Average + 100%
SG grades - mechanically graded to AS/NZS 1748	Average + 43%
GL grades for glulam to AS/NZS 1328	Average + 33%
LVL to AS/NZS 4357 (includes hySPAN and hyJOIST)	Average +18%

As can be seen, comparison of the 'average deflection' for different materials, even if calculated on the same basis, does not give the whole picture!

3. The limits referred are those specified in AS 1684.1 for the stated load case.

4. 'Rigidity ratio' expresses the rigidity of the specified beam relative to the rigidity of a notional beam just meeting the serviceability requirements of AS 1684.1

Notes for interpretation of reaction data

1. Duration of load factor 'k_1' for strength as per NZ 3603:1993

2. Negative (-) reactions relate to the 'gravity' or 'downwards' force on the support

3. Positive reactions relate to the 'upwards' forces or 'tie-down' requirement on the support

4. End reaction includes allowance for overhang/cantilever where one has been designed

WAIMAKARIRI DISTRICT COUNCIL
Plans and specifications APPROVED in accordance with the Building Act 2004, clause 49 and the Building
Regulations 1992, Clause 3
170037 13/03/2017 petert

GIB EzyBrace® Bracing Software

Consent Issued 170037

Demand Calculation Sheet

Building Consent 170037
Received 16/2/17

Job Details

Name:	G Baldock
Street and Number:	73 Kippenerger Ave
Lot and DP Number:	40 Dp 155398
City/Town/District:	Rangiora
Designer:	JKH
Company:	Stonewood Homes Ltd
Date:	Wednesday, 15 February 2017

WAIMAKARIRI DISTRICT COUNCIL
Plans and specifications APPROVED in accordance with the Building Act 2004, clause 49 and the Building
Regulations 1992, Clause 3
170037 13/03/2017 petert

Building Specification

Number of Storeys	1
Floor Loading	2 kPa
Foundation Type	Slab
	Single
Cladding Weight	Heavy
Roof Weight	Light
Room in Roof Space	No
Roof Pitch (degrees)	25
Roof Height above Eaves (m)	2.9
Building Height to Apex (m)	5.1
Ground to Lower Floor (m)	0.2
Average Stud Height (m)	2.4
Building Length (m)	17.4
Building Width (m)	11.7
Building Plan Area (m²)	168

Building Location

Wind Zone = High

Earthquake Zone 2

Soil Type	D & E (Deep to Very Soft)
Annual Prob. of Exceedance:	1 in 500 (NZS3604:2011 Default)

Bracing Units required for Wind

	Along	Across
Single Level	**640**	**1042**

Bracing Units required for Earthquake

	Along & Across
Single Level	**981**

Consent Issued 170037

Single Level Along Resistance Sheet

Building Consent 170037
Received 16/2/17

Job Name: G Baldock

									Wind	EQ
									Demand	
									640	981
									Achieved	
Line	Element	Length (m)	Angle (degrees)	Stud Ht. (m)	Type	Supplier	Wind (BUs)	EQ (BUs)	1257 196%	1144 117%
a	1	0.90		2.4	GS1-N	GIB®	57	53		
	2	0.80		2.4	GS1-N	GIB®	49	47		
	3	1.90		2.4	GS1-N	GIB®	131	114		
	4	0.50		2.4	GS1-N	GIB®	28	29		
									264 OK	244 OK
b	1	1.20		2.4	GS1-N	GIB®	83	72		
	2	1.40		2.4	GS1-N	GIB®	97	84		
	3	3.10		2.4	GS1-N	GIB®	214	186		
	4	0.50		2.4	GS1-N	GIB®	28	29		
									421 OK	371 OK
c	1	1.80		2.4	GS1-N	GIB®	124	108		
	2	1.80		2.4	GS1-N	GIB®	124	108		
									248 OK	216 OK
d	1	1.10		2.4	BLP-H	GIB®	165	165		
	2	0.50		2.4	GS1-N	GIB®	28	29		
	3	0.50		2.4	GS1-N	GIB®	28	29		
	4	1.50		2.4	GS1-N	GIB®	104	90		
									324 OK	313 OK

WAIMAKARIRI DISTRICT COUNCIL
Plans and specifications APPROVED in accordance with the Building Act 2004, clause 49 and the Building Regulations 1992, Clause 3
170037 13/03/2017 petert

GIB EzyBrace® Bracing Software

Consent Issued 170037

Single Level Across Resistance Sheet

Building Consent 170037
Received 16/2/17

Job Name: G Baldock

									Wind	EQ
									Demand	
									1042	981
									Achieved	
Line	Element	Length (m)	Angle (degrees)	Stud Ht. (m)	Type	Supplier	Wind (BUs)	EQ (BUs)	1547 148%	1413 144%
m	1	0.50		2.4	BLG-H	GIB®	58	59		
	2	0.80		2.4	BLP-H	GIB®	117	120		
	3	0.80		2.4	GS1-N	GIB®	49	47		
									224 OK	226 OK
n	1	3.00		2.4	GS1-N	GIB®	207	180		
	2	1.20		2.4	GS1-N	GIB®	83	72		
									290 OK	252 OK
o	1	3.00		2.4	GS1-N	GIB®	207	180		
	2	1.21		2.4	GS1-N	GIB®	83	72		
									290 OK	252 OK
p	1	3.00		2.4	GS1-N	GIB®	207	180		
	2	2.40		2.4	GS1-N	GIB®	166	144		
	3	1.70		2.4	GS1-N	GIB®	117	102		
									490 OK	426 OK
q	1	1.40		2.4	BLP-H	GIB®	210	210		
	2	0.40		2.4	GS1-N	GIB®	21	23		
	3	0.40		2.4	GS1-N	GIB®	21	23		
									252 OK	256 OK

WAIMAKARIRI DISTRICT COUNCIL
Plans and specifications APPROVED in accordance with the Building Act 2004, clause 49 and the Building Regulations 1992, Clause 3
170037 13/03/2017 petert

Consent Issued 170037

Building Consent 170037
Received 16/2/17

Custom Wall Elements

Supplier	System	Min. Length m	Wind BUs/m	EQ BUs/m

WAIMAKARIRI DISTRICT COUNCIL
Plans and specifications APPROVED in accordance with the Building Act 2004, clause 49 and the Building Regulations 1992, Clause 3
170037 13/03/2017 petert

Consent Issued BC170037

BC170037

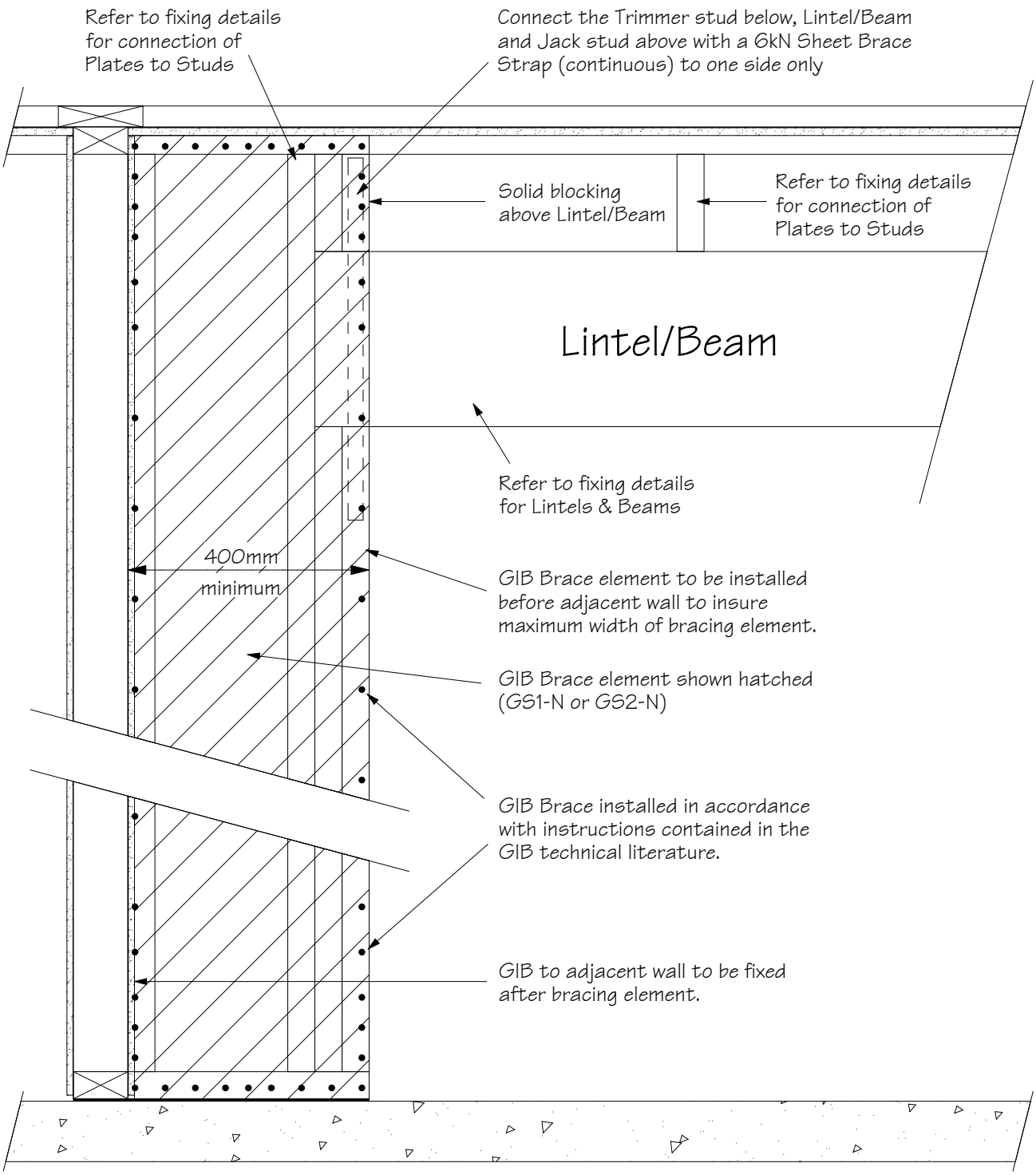

WAIMAKARIRI DISTRICT COUNCIL
Plans and specifications APPROVED in accordance with the Building Act 2004, clause 49 and the Building Regulations 1992, Clause 3
170037 13/03/2017 petert

The contractor shall verify all measurements prior to setout and commencement of work. Use figured dimensions in preference to scaling.

STONEWOOD HOMES
The home you deserve

This plan is developed for the purchaser and is copyright to Stonewood Homes NZ Ltd.

Timber & Aluminium Joinery	Scale: 1:10	Drawn By: Jody	
Minimal Length Bracing Detail	Issue Date: January 2012		
	Product: TAJ	Detail Number: 002	Rev: A	Detail Type: WA

T:\SWH Draughting\Detail Library\TAJ Timber & Aluminium Joinery Detail book\TAJ Timber & Aluminium Joinery LAYOUT.layout

Consent Issued BC170037

BC170037

Jody McMurdo

From: Dale Olsen (WWBAKL) <Dale.Olsen@GIB.CO.NZ>
Sent: Thursday, 19 January 2012 9:46 a.m.
To: Jody McMurdo
Subject: RE: Minimal Length Bracing Detail

Hi Jody

The attached detail looks ok.
The top plate/ stud underneath connection is covered by 3604 tables.
Lumberlok also produce tables for this.
Sometimes a 6kn is required for this as well.
It may be easier in some cases to run the strap all the way up??

Kind regards

Dale

WAIMAKARIRI DISTRICT COUNCIL
Plans and specifications APPROVED in accordance with the Building Act 2004, clause 49 and the Building Regulations 1992, Clause 3
170037 13/03/2017 petert

Dale Olsen
Technical Advisor
PO Box 12256 Penrose
37 Felix St
Penrose 1061
AUCKLAND

0800 100 442

From: Jody McMurdo [mailto:Jody.McMurdo@stonewood.co.nz]
Sent: Wednesday, 18 January 2012 5:05 p.m.
To: Dale Olsen (WWBAKL)
Cc: Draughtsman
Subject: RE: Minimal Length Bracing Detail

Hello Dale,

Thank you so much for your reply, especially when it is good news ☺

Please find attached detail TAJ002AWA – Minimal Length Bracing Detail
Can you please confirm for me you are satisfied with the attached detail and is suitable for use in conjunction with a GS1-N or GS2-N Bracing element?

Thank you again for your time

Jody McMurdo
Draughting Technician

Stonewood Homes NZ Ltd

Consent Issued BC170037

T 03 349 1515
F 03 349 9039
E Jody.McMurdo@stonewood.co.nz
W www.stonewood.co.nz

PO Box 11 036, Sockburn, Christchurch, New Zealand

From: Dale Olsen (WWBAKL) [mailto:Dale.Olsen@GIB.CO.NZ]
Sent: Wednesday, 18 January 2012 2:16 p.m.
To: Jody McMurdo
Subject: RE: Minimal Length Bracing Detail

Hi Jody

I have finally managed to speak to our Engineer that has been away.
In regards to your detail of a bracing element either side a garage door.
We are comfortable with this set up that you have shown with one addition.
That a **single 6kn strap be installed to connect the lintel/ beam, the under stud & the jack stud above**.
I trust this answers your question suitably.

Kind regards

Dale

WAIMAKARIRI DISTRICT COUNCIL
Plans and specifications APPROVED in accordance with the Building Act 2004, clause 49 and the Building Regulations 1992, Clause 3
170037 13/03/2017 petert

Dale Olsen
Technical Advisor
PO Box 12256 Penrose
37 Felix St
Penrose 1061
AUCKLAND

0800 100 442

From: Jody McMurdo [mailto:Jody.McMurdo@stonewood.co.nz]
Sent: Thursday, 12 January 2012 10:49 a.m.
To: Dale Olsen (WWBAKL)
Subject: Minimal Length Bracing Detail

Hello Dale

As per our conversation yesterday please find attached detail for a minimal length bracing element.
What we have been told by the council is the available bracing element length is counted from the full length stud, calculations below:

400 – (2x45 trimming studs) = 310
310 – (10 GIB) = 300

What we would like is confirmation from you that the trimming studs can be included in width as per the detail attached.
Any ideas would be most appreciated

Consent Issued BC170037

Building Consent 170037
Received 16/2/17

GIB®

EzyBrace® Systems

Specification and installation manual

WAIMAKARIRI DISTRICT COUNCIL
Plans and specifications APPROVED in accordance with the Building Act 2004, clause 49 and the Building Regulations 1992, Clause 3
170037 13/03/2017 petert

CBI 5113
AUGUST 2016

Consent Issued BC170037

Building Consent 170037
Received 16/2/17

WAIMAKARIRI DISTRICT COUNCIL
Plans and specifications APPROVED in accordance with the Building Act 2004, clause 49 and the Building Regulations 1992, Clause 3
170037 13/03/2017 petert

NATIONAL SUPPORT

VISIT: Winstone Wallboards Limited
37 Felix Street, Penrose,
Auckland 1061, New Zealand

POST: PO Box 12 256, Penrose 1642,
Auckland, New Zealand

PHONE: +64 9 633 0100

FAX: +64 9 633 0101
Free Fax: 0800 229 222

EMAIL: info@gib.co.nz

WEB: gib.co.nz

GIB® HELPLINE

0800 100 442

Consent Issued BC170037

Building Consent 170037
Received 16/2/17

Based on learnings derived from the 2011 Canterbury earthquakes GIB EzyBrace® Systems have been updated to offer improved design flexibility and further simplification of the bracing design and build process.

WAIMAKARIRI DISTRICT COUNCIL
Plans and specifications APPROVED in accordance with the Building Act 2004, clause 49 and the Building Regulations 1992, Clause 3
170037 13/03/2017 petert

NEW GIB EZYBRACE® 2016 DESIGN SOFTWARE

- Improved user interface with simplified bracing design process.
- Increased functionality including exterior line check function, easy insert/deletion of bracing elements and built in software help function.
- Includes the new GIB® Bracing element GS2- NOM
- Allows the GIBFix® Framing System to be used in GIB EzyBrace® designs.

NEW GIB® BRACING ELEMENT GS2-NOM

- Allows internal walls lined with GIB® plasterboard on both sides and fastened off as per the standard fixing requirements of the current GIB® Site Guide to contribute to bracing resistance.
- Potentially reduces the amount of fasteners[1]
- Encourages more even bracing distribution throughout the building.

[1] Actual savings dependent on building and bracing design

UPDATE TO OPENINGS IN BRACING ELEMENTS AND CEILING DIAPHRAGMS

- Large hole specification updated to use a more conservative methodology.
- Guidance included for fireplace flues and range hoods.

NEW — GIBFIX® FRAMING SYSTEM

- Reduced potential for fastener pop and joint cracking as a result of timber frame movement.
- Reduced potential for on-site call backs.
- Improved thermal performance.
- Reinforced plasterboard junctions.

BRANZ Appraised
Appraisal No.928 [2016]

Consent Issued BC170037

Building Consent 170037
Received 16/2/17

CONTENTS

System Summary **5**
GIB EzyBrace® Systems — August 2016 5
GIB® Plasterboard Substitution Table 5

Introduction **6**
Scope of Use 6
Finish Quality — Framing and Substrates 6
New GIBFix® Framing Systems 6
New GS2-NOM Bracing Element 6
Compliance with the NZ Building Code 7
CAD Design Detail 7
Appraisal 7

Bracing Resistance and Demand **8**
Bracing Resistance 8
Bracing Demand 9
Software Functionality 10

Design and Construction **12**
GIB® Plasterboard Linings 12
GIB EzyBrace® Systems in Water-Splash Areas 12
Renovation 12
Openings in Bracing Elements 12
Timber Framing 13
GIBFix® Framing System (Alternative Layout) 13
Guidelines for Intersection Walls 13
Top Plate Connections 14
Parapets and Gable End Walls 14
Bottom Plate Fixing 14
Bracing Strap Installation 15
GIB HandiBrac® Installation 16
GIB HandiBrac® Placement with GIBFix® Framing System Layout 17
Ceiling Diaphragms 18
Ceiling Battens in Ceiling Diaphragms 19
Openings in Ceiling Diaphragms 20
Length of GIB EzyBrace® Elements ('N' Type) 21
Length of GIB EzyBrace® Elements ('H' Type) 22

System Specifications **23**
GIB EzyBrace® Systems Specification — GS1-N 23
GIB EzyBrace® Systems Specification — GS2-NOM 24
GS2-NOM Adhesive Fixing Option at Door Jambs 25
GIB EzyBrace® Systems Specification — GS2-N 26
GIB EzyBrace® Systems Specification — GSP-H 27
GIB EzyBrace® Systems Specification — BL1-H 28
GIB EzyBrace® Systems Specification — BLG-H 29
GIB EzyBrace® Systems Specification — BLP-H 30

Sustainability and the Environment **31**

WAIMAKARIRI DISTRICT COUNCIL
Plans and specifications APPROVED in accordance with the Building Act 2004, clause 49 and the Building Regulations 1992, Clause 3
170037 13/03/2017 petert

Consent Issued BC170037

Building Consent 170037
Received 16/2/17

GIB EzyBrace® Systems — August 2016

Winstone Wallboards Ltd accepts no liability if GIB EzyBrace® Systems are not designed and installed in strict accordance with instructions contained in this publication.

USE ONLY THE CURRENT SPECIFICATION

This publication may be superseded by a new publication at any time. Winstone Wallboards accepts no liability for reliance upon publications that have been superseded. Check for the current publication at gib.co.nz/library before using this publication. If you are unsure whether this is the current publication, call the GIB® Helpline on 0800 100 442.

GIB EzyBrace® 2011 software and specification literature remains valid until futher notice.

PATENTS

GIBFix® Framing System and GIB EzyBrace® Systems, including componentry and design method, have patents pending (NZ Patent Number 596691, NZ Patent 709159 pending) and design and other IP rights reserved.

Beware of substitution

The performance of GIB® Systems are very sensitive to design detailing and construction practices. All GIB® Systems have been developed specifically for New Zealand conditions and independently tested or assessed to ensure the required level of performance. It is important to use only GIB® branded components where specified and to closely follow the specified design details and construction practices, to be confident that the required level of performance and quality is achieved on site.

For further information call our GIB® Helpline on 0800 100 442.

GIB EzyBrace® Systems have been designed and tested using only the products specified. When additional GIB® plasterboard properties are required the table below provides acceptable alternative options.

	Acceptable alternative GIB® plasterboards								
Specified GIB® plasterboard	GIB® Standard	GIB Ultraline®	GIB Braceline/ Noiseline®	GIB Aqualine®	GIB Toughline®	GIB Fyreline®			
						10mm	13mm	16mm	19mm
GIB® Standard		OK	OK	OK	OK	Note 1 and 3			
GIB Braceline®	X	X		Note 2	OK	X	Notes 1, 2 and 3		

Note 1 *The fastener type and length must be as required for the relevant FRR system using the perimeter fixing pattern illustrated for the relevant bracing specification.*

Note 2 *The element must be 900mm or longer. Decrease perimeter fastener centres to 100mm. The bracing corner fastening pattern, as illustrated for the relevant specification applies to all four corners of the element. Panel hold-down fixings are required.*

Note 3 *Specify traditional wall framing layout (see figure 1) where a Fire Resistance Rating (FRR) is required.*

Consent Issued BC170037

Building Consent 170037
Received 16/2/17

Scope of use

This document is a guide to wall bracing of light timber frame (LTF) buildings constructed in accordance with NZS3604:2011 Timber Framed Buildings and presents a simple and efficient method for calculating and incorporating bracing resistance. This information draws on recent experiences from seismic activity in New Zealand and seeks to minimise earthquake damage to plasterboard linings in LTF buildings.

This document outlines the main principles of bracing design and construction using GIB® plasterboard products and systems. Further detailed information can be found in the GIB® Bracing Supplement by visiting gib.co.nz/library. This 'live' on-line document is updated continuously in response to market feedback and Winstone Wallboards' development initiatives.

Finish quality — framing and substrates

Home owners are increasingly demanding a high quality of interior finish. Finish quality is heavily influenced by the substrate to which linings are fixed. Detailed information on 'Levels of Finish' is given in AS/NZS 2589 and the latest version of the GIB® Site Guide.

New GIBFix® Framing System

With increased NZ Building Code requirements and growing customer demand for thermal efficiency and high quality interior finishes, traditional framing practices present problems such as multiple framing members at wall intersections creating thermal 'bridges' and cavities where insulation cannot be installed effectively.

Figure 1 shows a traditional wall framing layout. Figure 2 shows the alternative GIBFix® Framing System layout.

Multiple timber framing members also take longer to dry resulting in an increased risk of fastener pops and blemishes resulting from timber frame movement.

The GIBFix® Framing System offers better thermal efficiencies and minimises potential joint imperfections resulting from interior linings being fixed to multiple timber framing members.

The GIBFix® Framing System can be used in conjunction with GIB EzyBrace® Systems.

Bracing resistance is not affected by the GIBFix® Framing System if the use of this alternative timber framing layout is preferred. Refer to the GIBFix® Framing System literature for more information.

Bracing ratings apply whether fixing is directly into timber or into the metal components, provided correct construction details, fastener types and centres are applied.

FIGURE 1: TRADITIONAL WALL FRAMING LAYOUT

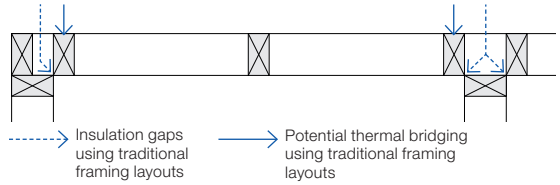

GFS004

FIGURE 2: GIBFIX® FRAMING SYSTEM (ALTERNATIVE LAYOUT)

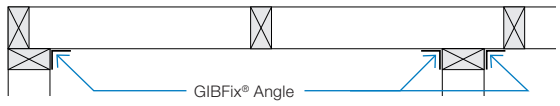

GFS005

NEW GS2-NOM Bracing Element

The new GS2-NOM bracing element allows most homes to be braced with a single lining type and less fixings so that a high quality finish is maintained throughout.

GS2-NOM permits the contribution of 'nominally fixed' internal walls. Higher performance elements are commonly specified on external walls and where limited wall area is available or adjacent to significant openings.

Winstone Wallboards recommends the use of the GIBFix® Framing System in conjunction with GS2-NOM elements. Key benefits of this approach include:

- Reduced potential for fastener pop and joint cracking of plasterboard linings.
- Enhanced thermal performance.
- Allows internal walls lined with GIB® plasterboard on both sides and fastened off as per the standard fixing requirements of the current GIB® Site Guide to contribute bracing resistance.
- Potentially reduces the amount of fasteners[1].
- Encourages more even bracing distribution throughout the building.

1. Actual savings dependent on building and bracing design.

Consent Issued BC170037

Building Consent 170037
Received 16/2/17

Compliance with the NZ Building Code

NZBC CLAUSE B1 — STRUCTURE

The design and material specification for steel and timber framing used in conjunction with this literature must be in accordance with the performance requirements of NZBC Clause B1. GIB EzyBrace® Systems comply with the requirements of NZS 3604:2011, when designed and installed in accordance with this publication and relevant technical literature. NZS 3604:2011 is an acceptable solution to NZBC Clause B1.

NZBC CLAUSE B2 — DURABILITY

Under normal conditions of dry internal use GIB EzyBrace® Systems have a service life in excess of 50 years and satisfy the requirements of NZBC Clause B2. When in conditions of dry internal use, the components specified in this literature satisfy the requirements of NZBC Clause B2.

GIB® EzyBrace® Systems must not be specified in areas where 15 year durability applies and where linings are subject to direct water pressure, e.g. shower cubicle or shower over bath situations.

NZBC CLAUSE F2 — HAZARDOUS BUILDING MATERIALS

Under normal conditions of use, during handling, installation or serviceable life, the products detailed in GIB EzyBrace® Systems do not constitute a health hazard and meet the provisions of the NZBC Clause F2.

NZBC CLAUSE H1 — ENERGY EFFICIENCY

Buildings must be constructed to achieve an adequate degree of energy efficiency and the building envelope must provide adequate thermal resistance. The required thermal resistance (R-value) of timber framed external walls depends on climate zone but is commonly in the range from R 1.9 to R 2.0.

CAD design details

Where applicable drawings related to GIB EzyBrace® Systems have been produced for CAD design. These are identified by a unique number in the bottom corner of each detail box. CAD design details can be found at gib.co.nz/library.

Appraisal

GIB EzyBrace® Systems 2016 have been appraised by the Building Research Association of New Zealand (BRANZ), Appraisal No. 928 (2016) GIB EzyBrace® Systems, 2016.

It is of prime importance to comply with the details of design, construction and workmanship in this document.

Consent Issued BC170037

Building Consent 170037
Received 16/2/17

Bracing resistance

WALL BRACING LAYOUT

When designing the bracing layout, carefully consider the final finished appearance and utilise full wall lengths where possible, avoiding unnecessary fastenings in the centre of a clear wall. Using the available wall length provides additional bracing and achieves improved aesthetics.

FIGURE 3: WALL BRACING LAYOUT

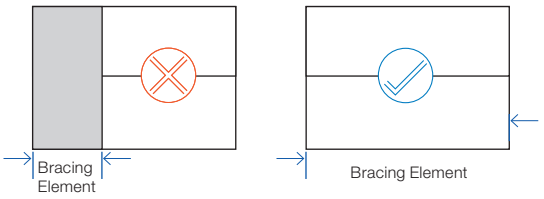

BRACING DISTRIBUTION

Distribute bracing by drawing a grid pattern of bracing lines along and across the building. Bracing lines must coincide as much as possible with the wall bracing elements. Pairs of elements may be counted on a single line provided they are no more than 2 metres apart and parallel. See figure 4.

Locate bracing evenly throughout the building and as close as practical to corners of external walls.

Space bracing lines no more than:

- 6 metres for standard construction with any GIB® plasterboard ceiling, or
- 7.5 metres where dragon ties in accordance with NZS3604:2011 have been installed, or
- 12 metres with a GIB® plasterboard ceiling diaphragm.

The construction of ceiling diaphragms is described in detail on p.18–20.

NZS3604:2011 requires that no bracing line shall have a capacity less than the greater of:

- 100 Bracing Units (BUs), or
- 15 x the external wall length (BUs) for bracing lines coinciding with external walls, or
- 50% of the total demand (D) divided by the number of lines (n) in the direction being considered (BUs).

FIGURE 4: BRACING GRID LAYOUT

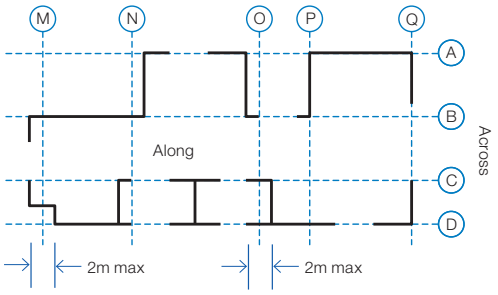

The NZS3604 'rules' are merely minimum guidelines and compliance with them does not in itself ensure even distribution. The designer is responsible for checking distribution. Poor distribution can cause torsional effects and localised or more significant damage in an earthquake event.

GIB EZYBRACE® SYSTEMS

The GIB EzyBrace® Specification Numbering System (and sub-components thereof) is protected by copyright and makes specification and identification of GIB EzyBrace® Systems transparent.

- 'GS' stands for GIB® Standard.
- 'BL' for GIB Braceline®.
- 'P' for plywood.
- '1' and '2' for linings one or both sides.
- 'N' stands for 'no specific panel hold-down fixings'.
- 'H' stands for 'specific panel hold-down fixing' required.
- 'NOM' stands for 'nominal plasterboard fixing'. This refers to the standard fixing method used to install plasterboard as shown in the current GIB® Site Guide.

Where specific hold-down fixings are specified, refer to p.15-16. GIB HandiBrac® is fully contained within the framing cavity and does not interfere with lining installation and quality of finish.

Where no specific hold-down fixings are required, the minimum NZS3604:2011 bottom plate fixings apply.

Full bracing element construction details are provided in this technical literature.

Further general design and construction information can also be found in our GIB® Bracing Supplement by visiting gib.co.nz/library.

Specifying GIB EzyBrace® elements (minimum wall length 400mm)	
Inside lining external walls.	Nominate available lengths of wall as GS1-N elements. Use BL1-H if higher ratings are required. If the other side of the frame is lined with plywood consider GSP-H or BLP-H elements or use alternative proprietary bracing systems.
Internal walls (only one side available for bracing).	Nominate available lengths of wall as GS1-N elements. Use BL1-H if higher ratings are required.
Internal walls (both sides available for bracing).	Nominate available length of wall as GS2-NOM elements. Change to GS1-N if higher ratings are required. Change to GS2-N if higher ratings are required. Change to BLG-H for even higher ratings. Consider GSP-H or BLP-H if the opposite side is lined with plywood.

Consent Issued BC170037

Building Consent 170037
Received 16/2/17

Bracing demand

GIB EZYBRACE® CALCULATOR

The GIB EzyBrace® calculator is a software tool to determine the wind and earthquake bracing demand and to design the bracing resistance for light timber-framed buildings constructed in accordance with NZS 3604:2011.

The updated GIB EzyBrace® calculator combines an up-to-date user-friendly interface with the latest knowledge relating to the performance of GIB® plasterboard in light timber-framed structures when subjected to high winds or earthquakes. The calculator can be down-loaded free of charge by visiting gib.co.nz/ezybrace and can be installed on either Microsoft® or Apple® Mac environments.

DEMAND

Wind and Earthquake 'Demand' calculates the forces a structure must be able to resist during its 'design life'. The GIB EzyBrace® calculator's Demand sheet determines the number of Bracing Units required depending on building location, building dimensions and materials used. The Demand sheet closely follows the familiar format of our Excel based GIB EzyBrace® calculator, and includes additional features such as a pop-up help facility explaining required input.

Bracing resistance sheets ('tabs') are added depending on the building specification entered. For example, subfloor bracing resistance tabs only show when a 'subfloor' foundation type has been selected.

The Demand sheet gives the designer the option to select a longer earthquake return period which represents a higher earthquake design force. The default for buildings constructed in accordance with NZS3604:2011 is an earthquake that has a 10% chance of being exceeded within the assumed 50 year 'design life' of a light timber framed residential structure, a 'return period' of 500 years.

Many commercial and public buildings are designed for the more stringent requirement of a 10% probability of exceedance in a 100 or 250 year life expectancy.

A screen shot of the GIB EzyBrace® 2016 Demand Sheet and Help Facility is shown in figure 5.

FIGURE 5: GIB EZYBRACE® 2016 — DEMAND CALCULATION SHEET AND 'POP UP' HELP FACILITY

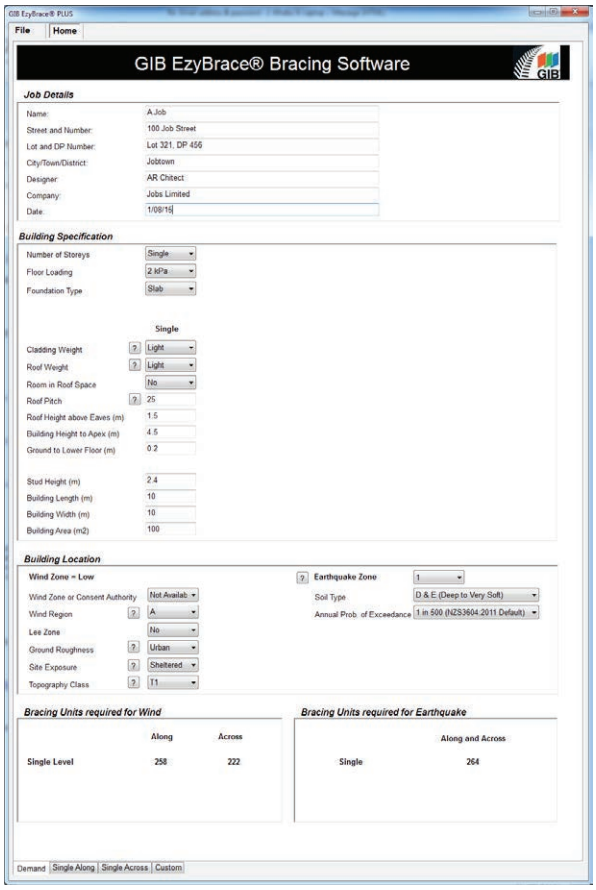

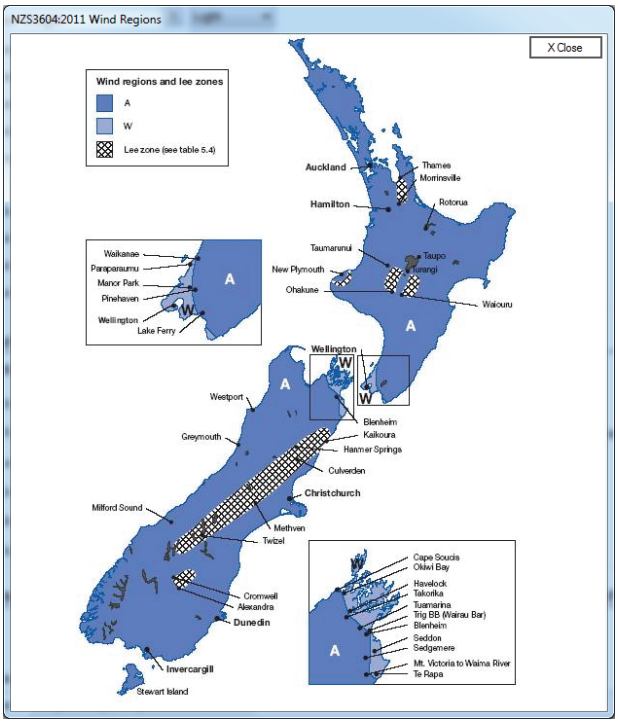

Download GIB EzyBrace® 2016 design software from gib.co.nz/ezybrace

Consent Issued BC170037

Building Consent 170037
Received 16/2/17

Software functionality

Innovations adopted in the GIB EzyBrace® 2016 bracing 'resistance' calculation sheets include the ability to easily add and delete lines and elements during calculations.

The software compares bracing resistance achieved with demand and for wall bracing lines incorporating external walls, the external wall length can now be entered to check minimum bracing units required on that line. The NZS 3604:2011 rules and associated software output are not the only check. Designers must additionally check the building layout to ensure adequate bracing distribution.

Figures 6 and 7 show screen shots of the Wall and Subfloor Resistance Sheets respectively.

FIGURE 6: GIB EZYBRACE® 2016 — WALL BRACING RESISTANCE CALCULATION SHEET

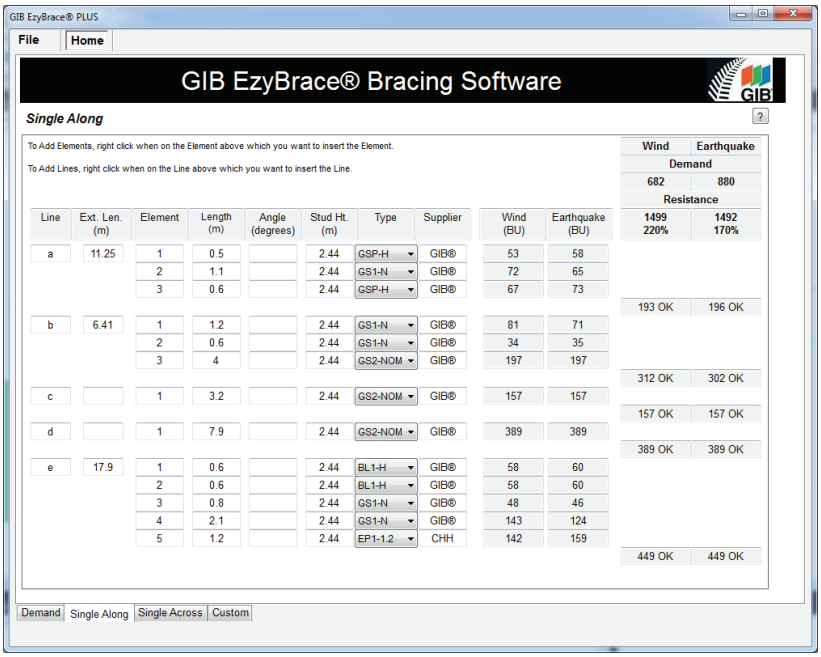

Line	Ext. Len. (m)	Element	Length (m)	Angle (degrees)	Stud Ht. (m)	Type	Supplier	Wind (BU)	Earthquake (BU)	Wind	Earthquake
										Demand	
										682	880
										Resistance	
										1499 220%	1492 170%
a	11.25	1	0.5		2.44	GSP-H	GIB®	53	58		
		2	1.1		2.44	GS1-N	GIB®	72	65		
		3	0.6		2.44	GSP-H	GIB®	67	73		
										193 OK	196 OK
b	6.41	1	1.2		2.44	GS1-N	GIB®	81	71		
		2	0.6		2.44	GS1-N	GIB®	34	35		
		3	4		2.44	GS2-NOM	GIB®	197	197		
										312 OK	302 OK
c		1	3.2		2.44	GS2-NOM	GIB®	157	157		
										157 OK	157 OK
d		1	7.9		2.44	GS2-NOM	GIB®	389	389		
										389 OK	389 OK
e	17.9	1	0.6		2.44	BL1-H	GIB®	58	60		
		2	0.6		2.44	BL1-H	GIB®	58	60		
		3	0.8		2.44	GS1-N	GIB®	48	46		
		4	2.1		2.44	GS1-N	GIB®	143	124		
		5	1.2		2.44	EP1-1.2	CHH	142	159		
										449 OK	449 OK

FIGURE 7: GIB EZYBRACE® 2016 — SUBFLOOR BRACING RESISTANCE CALCULATION SHEET

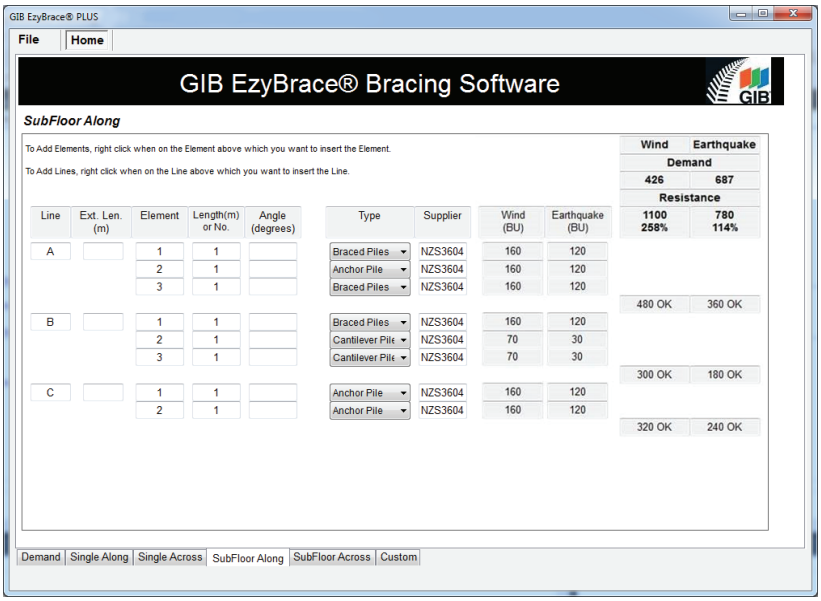

Line	Ext. Len. (m)	Element	Length(m) or No.	Angle (degrees)	Type	Supplier	Wind (BU)	Earthquake (BU)	Wind	Earthquake
									Demand	
									426	687
									Resistance	
									1100 258%	780 114%
A		1	1		Braced Piles	NZS3604	160	120		
		2	1		Anchor Pile	NZS3604	160	120		
		3	1		Braced Piles	NZS3604	160	120		
									480 OK	360 OK
B		1	1		Braced Piles	NZS3604	160	120		
		2	1		Cantilever Pile	NZS3604	70	30		
		3	1		Cantilever Pile	NZS3604	70	30		
									300 OK	180 OK
C		1	1		Anchor Pile	NZS3604	160	120		
		2	1		Anchor Pile	NZS3604	160	120		
									320 OK	240 OK

Download GIB EzyBrace® 2016 design software from gib.co.nz/ezybrace

Consent Issued BC170037

Building Consent 170037
Received 16/2/17

Software functionality

Custom elements can be entered by accessing the 'custom' tab as shown in figure 8.

FIGURE 8: GIB EZYBRACE® 2016 — CUSTOM ELEMENTS SHEET

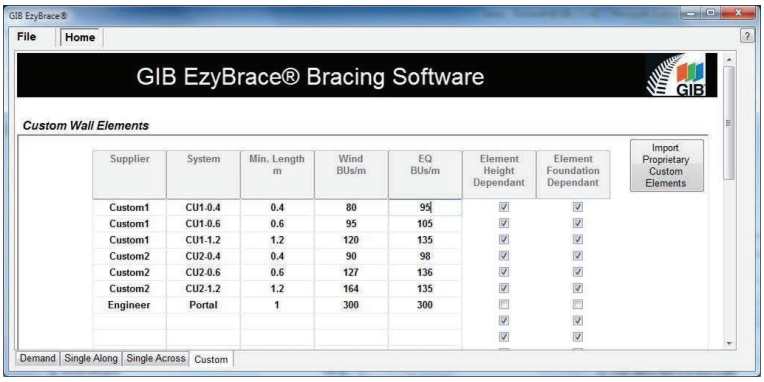

Supplier	System	Min. Length m	Wind BUs/m	EQ BUs/m	Element Height Dependant	Element Foundation Dependant
Custom1	CU1-0.4	0.4	80	95	☑	☑
Custom1	CU1-0.6	0.6	95	105	☑	☑
Custom1	CU1-1.2	1.2	120	135	☑	☑
Custom2	CU2-0.4	0.4	90	98	☑	☑
Custom2	CU2-0.6	0.6	127	136	☑	☑
Custom2	CU2-1.2	1.2	164	135	☑	☑
Engineer	Portal	1	300	300	☐	☐
					☑	☑
					☑	☑

Note: Values and systems shown in Custom Elements Sheets are for illustrative purposes only.

Help can be accessed by pressing the ? symbol which displays a window with further information.

The GIB EzyBrace® 2016 software has a number of options that can be accessed via the File tab at the top left hand corner of the window. The options include: New, Save, Save As, Open, Recent and Print.

- The New option closes any opened job ready for the input of a new job.
- The Save option saves the currently opened job to the same filename and the Save As option saves the job to a new filename.
- The Open option prompts for the name of an existing job.
- The Recent option displays a list of the ten latest jobs and allows for the selection of one of these jobs to be opened.
- The Print option displays the print screen. In this screen, a print preview is displayed. The print preview can be copied to the clipboard by clicking the right-hand mouse button. Also on the print screen is the option to choose which pages are to be printed and the option to print the output to a portable data format, PDF, file.
- The Print Screen View is shown in figure 9.

FIGURE 9: GIB EZYBRACE® 2016 — PRINT SCREEN VIEW

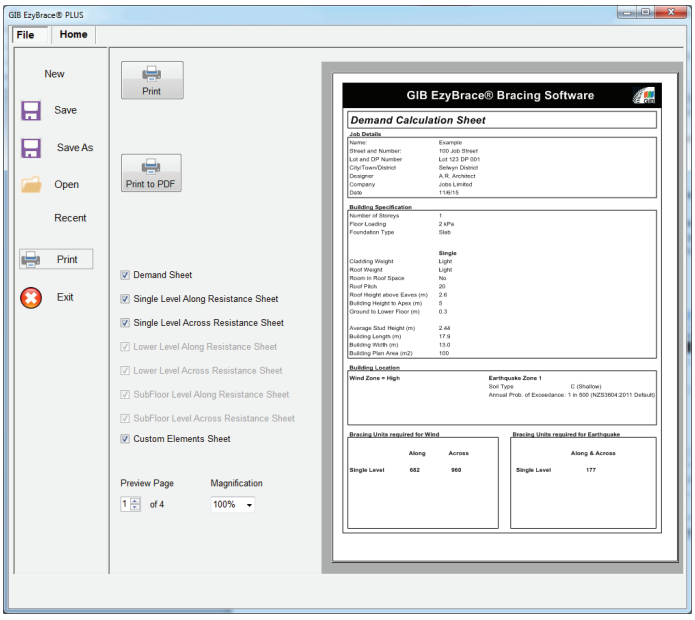

Download GIB EzyBrace® 2016 design software from gib.co.nz/ezybrace

Consent Issued BC170037

Building Consent 170037
Received 16/2/17

GIB® plasterboard linings

When fixing part sheets of GIB® plasterboard, a minimum sheet width of 300mm applies for bracing elements. Horizontal fixing is recommended. If fixing vertically, full height sheets shall be used where possible. Where sheet end butt joints are unavoidable they must be formed over nogs or over the studs and fastened at 200mm centres. Alternatively, and preferably, sheet end butt joints may be back-blocked.

When a GIB® Bracing element has been designated for a section of wall, BU ratings cannot be increased by incorporating additional proprietary bracing elements within that same section of wall.

LIMITATIONS

- GIB® plasterboard must be stacked flat and protected from the weather.
- GIB® plasterboard must be handled as a finishing material.
- GIB® plasterboard in use must not be exposed to liquid water or be installed in situations where extended exposure to humidities above 90% RH can reasonably be expected.
- GIB EzyBrace® Systems must not be used in showers or behind baths.
- It is highly recommended not to install GIB® plasterboard in any situation where external claddings are not in place or the property is not adequately protected from the elements.
- If GIB® plasterboard is installed under these conditions, the risk of surface defects such as joint peaking or cracking is greatly increased.

GIB EzyBrace® Systems in water-splash areas

When GIB® plasterboard is installed in locations likely to be frequently exposed to liquid water it must have an impervious finish. Examples are adhesive fixed acrylic shower linings or ceramic tiles over an approved waterproof membrane over GIB Aqualine® The NZBC requires 15 years durability in these situations. Bracing elements are required to have a durability of 50 years. Bracing elements are not to be located in shower cubicles or behind baths because of durability requirements, the likelihood of renovation, and practical issues associated with fixing bracing elements to perimeter framing members. Otherwise GIB EzyBrace® Systems can be used in water-splash areas as defined by NZBC Clause E3, provided these are maintained impervious for the life of the building.

For futher design details refer to the current GIB Aqualine® Wet Area Systems literature.

Renovation

When relining walls during the process of renovation, ensure that bracing elements are reinstated (check the building plans).

Openings in bracing elements

SMALL OPENINGS

Small openings (e.g. power outlets) of 90 x 90mm or less may be placed no closer than 90mm to the edge of the braced element. A block may need to be provided alongside the perimeter stud as shown below.

LARGE OPENINGS

Openings above 90 x 90mm such as switch boards, recessed cabinets and TV's etc. should be placed outside of the bracing element or locate bracing on the other side of the wall framing.

FIGURE 10: SMALL OPENINGS IN BRACING ELEMENTS

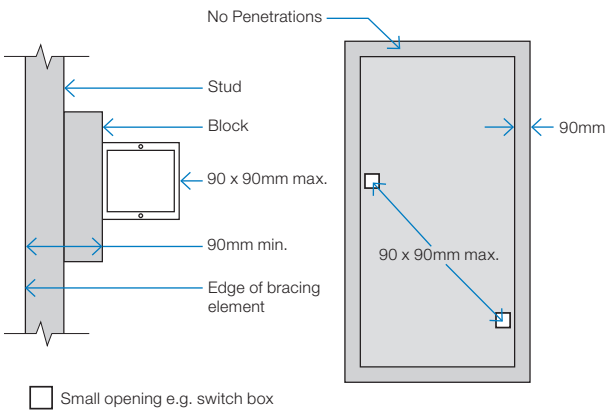

GEB001

FIGURE 11: LARGE OPENINGS AND BRACING ELEMENTS

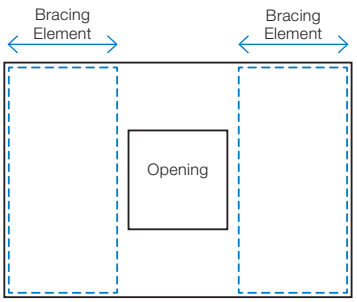

Consent Issued BC170037

Building Consent 170037
Received 16/2/17

Timber framing

General framing requirements such as grade, spacings and installation shall comply with the provisions of NZS 3604:2011. To achieve the published bracing performance the minimum actual framing dimensions are 90 x 45mm for external walls and 70 x 45mm for internal walls.

As a minimum the use of Kiln Dried Stress Graded timber for all wall, roof and mid-floor framing members is recommended.

GIBFix® Framing System (alternative layout)

Practices recommended as part of the GIBFix® Framing System aim to increase timber framing efficiencies, reduce reliance on unnecessary framing at wall junctions and minimise surface imperfections that commonly arise from constructing plasterboard junctions over multiple timber members. GIBFix® Angles fixed to a single timber framing member are introduced to tie together plasterboard junctions, improving seismic resilience and decrease the risk of future defects due to timber movement. The GIBFix® Framing System can be used in conjunction with the GIB EzyBrace® System.

Note: GIBFix® Angles and 32mm x 7g GIB® Grabber® Dual Thread Screws may also be used in traditional wall framing layouts and in GIB EzyBrace® Systems.

When the GIBFix® Framing System is used a minimum of 2 equally spaced nogs for walls between 2.4m and 3m in height are required at corners and wall junctions.

When used in GIB EzyBrace® systems GIBFix® Angles must run from top to bottom on all applicable studs. If 2 GIBFix® Angles are required on a stud they must be overlapped by a minimum of 300mm with 2/32mm 7g GIB® Grabber® Dual Thread Screws penetrating through both GIBFix® Angles.

For full specification details refer to GIBFix® Framing System literature available at gib.co.nz/gibfix.

Guidelines for intersection walls

GIB® Bracing Elements may have intersecting walls with a minimum length of 200mm. Fasteners are required around the perimeter of the bracing element. Vertical joints at T-junctions shall be fixed and jointed as specified for intermediate sheet joints. The bracing element length must be no less than 900mm.

Where a Wall Bracing Element is interrupted by a T-junction the element is deemed to be continuous for the whole length (900mm minimum in the example illustrated).

When fixing part sheets of GIB® plasterboard to the side of a T-junction, a minimum width of 300mm applies for bracing elements. See figures 12 and 13.

FIGURE 12: WALL INTERSECTION (TRADITIONAL WALL FRAMING)

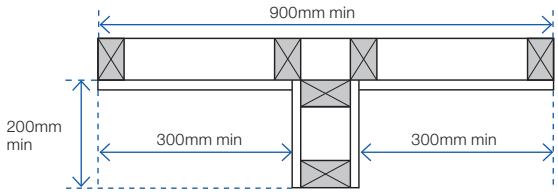

GEB002

FIGURE 13: WALL INTERSECTION (GIBFIX® FRAMING SYSTEM)

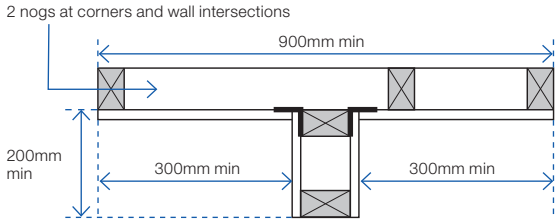

GEB003

FIGURE 14: CORNER INTERSECTION (GIBFIX® FRAMING SYSTEM)

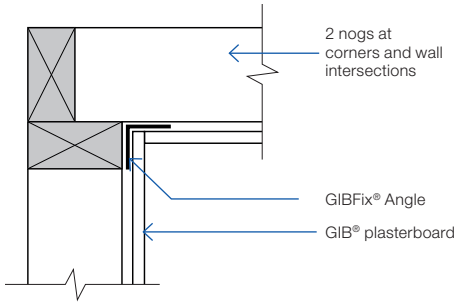

GFS001

FIGURE 15: WALL INTERSECTION FASTENER PLACEMENT

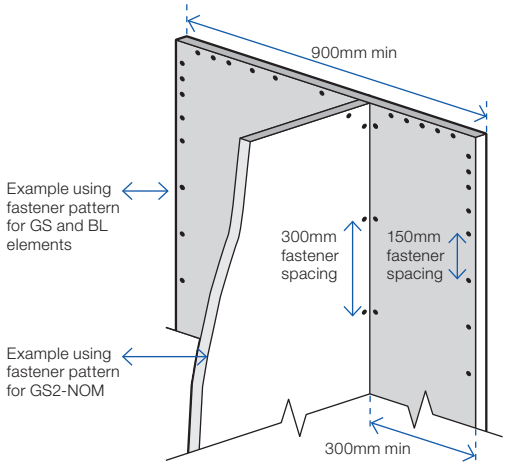

Junction

Min 32mm x 6g GIB® Grabber® High Thread or 32mm x 7g GIB® Grabber® Dual Thread Screws @ 300mm ctrs each side.

Consent Issued BC170037

Building Consent 170037
Received 16/2/17

Top plate connections

For top plate connections refer to NZS3604:2011 section 8.7.3.

Parapets and gable end walls

Bracing elements must be fixed from top plate to bottom plate. Fixing to a row of nogs is not acceptable unless either:

A continuous member such as an ex 90 x 45mm ribbon plate is fixed across the studs just above a row of nogs at the ceiling line, as shown in figure 16.

or

GIBFix® Angle as shown in figure 17. The angle is fixed to a row of nogs with 30 x 2.5mm galv flat head nails or 32mm x 7g GIB® Grabber® Dual Thread Screws at 300mm centres.

Bottom plate fixing

TIMBER FLOOR

For elements with an 'N' specification use 2/100 x 3.75mm hand or 3/90 x 3.15mm power-driven nails at 600mm centres.

In addition, for elements with an 'H' specification, use GIB HandiBrac® panel hold-down fixings at each end of the bracing element, see p.16.

CONCRETE FLOOR — EXTERNAL WALL BRACING ELEMENTS

For bracing elements with an 'N' specification fix external wall plates in accordance with NZS 3604:2011.

Use GIB HandiBrac® panel hold-down fixings at each end of bracing elements with an 'H' specification and minimum intermediate fixings as required by NZS 3604:2011.

CONCRETE FLOOR — INTERNAL WALL BRACING ELEMENTS

For bracing elements with an 'N' specification fix plates in accordance with NZS 3604:2011 or use 75 x 3.8mm shot-fired fasteners with 16mm discs spaced at 150 and 300mm from end-studs and 600mm centres thereafter.

For bracing elements with an 'H' specification use GIB HandiBrac® panel hold-down fixings at each end of the element and minimum intermediate fixings as required by NZS 3604:2011.

FIGURE 16: PARAPETS AND GABLE ENDS WITH RIBBON PLATE

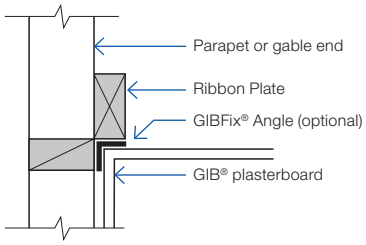

FIGURE 17: PARAPETS AND GABLE ENDS WITH GIBFIX® ANGLE

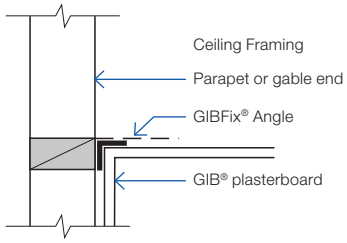

GFS003

BOTTOM PLATE FIXINGS FOR GIB® BRACING ELEMENTS

Brace type	Concrete slabs		Timber floors
	External wall	Internal wall	External and Internal walls
GS1-N	As per NZS 3604:2011. No specific additional fastening required.	As per NZS 3604:2011. Alternatively use 75 x 3.8mm shot-fired fasteners with 16mm discs, 150mm and 300mm from each end of the bracing element and at 600mm thereafter.	Pairs of 100 x 3.75mm flat head hand driven nails or 3/90 x 3.15mm power driven nails at 600mm centres in accordance with NZS 3604:2011.
GS2-N	Not applicable.		
GS2-NOM			
GSP-H BL1-H BLP-H	Intermediate fastenings to comply with NZS 3604:2011 In addition: GIB HandiBrac® fixings or metal wrap-around strap fixings and bolt as illustrated on p.15 and 16.		Pairs of 100 x 3.75mm flat head hand driven nails or 3/90 x 3.15mm power driven nails at 600mm centres in accordance with NZS 3604:2011. In addition: GIB HandiBrac® fixings or metal wrap-around strap fixings and bolt as illustrated on p.15 and 16.
BLG-H	Not applicable	As for GSP-H, BL1-H, BLP-H on concrete slab as illustrated on p.15 and 16.	

Consent Issued BC170037

Building Consent 170037
Received 16/2/17

Bracing strap installation

Care needs to be taken with the installation of the bracing strap. It should be checked in to be flush with the face of the stud providing a flat substrate for the plasterboard and positioned in such a way that the corner fastenings of the bracing element are not affected by it. Keeping the strap to the edge of the end stud as shown will allow the corner fastenings to be installed without having to penetrate the bracing strap.

Concrete floor	Timber floor
400 x 25 x 0.9mm galvanised strap to pass under the plate and up the other side of the stud. Six 30 x 2.5mm flat head galvanised nails to each side of the stud. Three 30 x 2.5mm flat head galvanised nails to each side of the plate. Hold down bolt with 50 x 50 x 3mm washer to be fitted within 80mm of the end of the element.	
Internal wall	
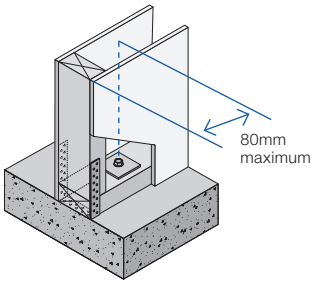 GEB004	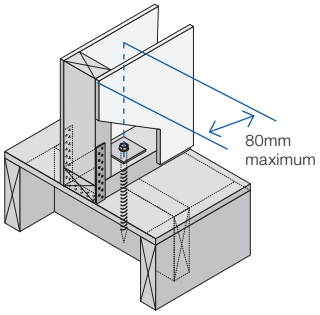 GEB005
External wall	
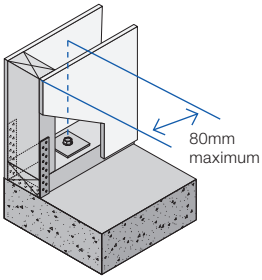 GEB006	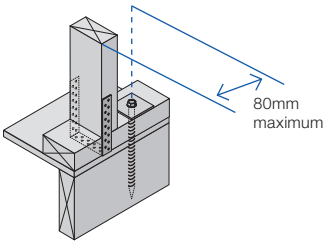 GEB007
Note: Where applicable drawings have been produced for CAD design. These are identified by a unique number in the bottom corner of each detail box that can be found at gib.co.nz/library.	2/300 x 25 x 0.9mm galvanised straps with six 30 x 2.5mm flat head galvanised nails to each stud and into the floor joist and three nails to the plate. Block to nog fixed with 3/100 x 3.75mm nails to stud.
	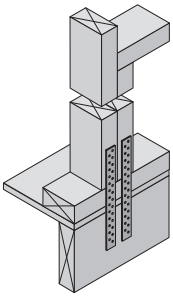 GEB008

Hold-down fastener requirements	
Concrete floor	Timber floor
A mechanical fastening with a minimum characteristic uplift capacity of 15kN fitted with a 50 x 50 x 3mm square washer within 80mm of the ends of the bracing element.	12 x 150mm galvanised coach screw fitted with a 50 x 50 x 3mm square washer within 80mm of the ends of the bracing element

Consent Issued BC170037

Building Consent 170037
Received 16/2/17

GIB HandiBrac® installation

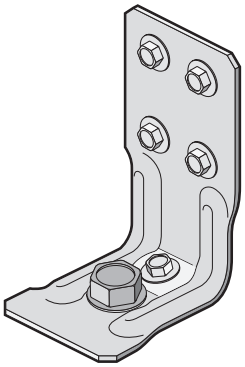

Developed in conjunction with MiTek™, the GIB HandiBrac® has been designed and tested by Winstone Wallboards for use in GIB EzyBrace® elements that require hold-downs. The GIB HandiBrac® is a substitute for bottom plate hold-down straps.

- Quick and easy to fit.
- May be fitted at any stage before lining.
- Framing face is clear to allow flush lining.
- Easily inspected.

The GIB HandiBrac® with BOWMAC® blue head screw bolt is suitable for timber and concrete floors constructed in accordance with NZS 3604:2011.

Concrete floor		Timber floor	
External walls	Internal walls	External walls	Internal walls
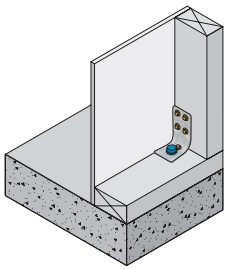 GEB009	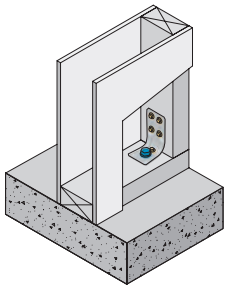 GEB010	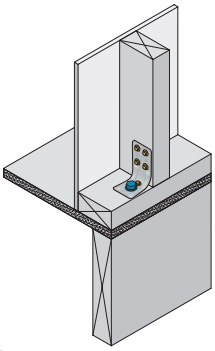 GEB011	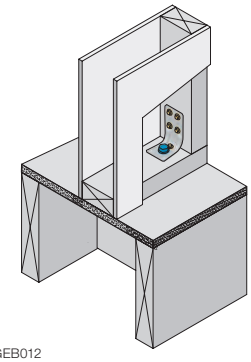 GEB012
Position GIB HandiBrac® as close as practicable to the internal edge of the bottom plate.	Position GIB HandiBrac® at the stud/plate junction and at mid-width of plate.	Position GIB HandiBrac® flush with the outside stud face, as close as practicable to the centre of the boundary joist.	Position GIB HandiBrac® in the centre of floor joist or full depth solid block.
Hold-down fastener requirements			
A mechanical fastening with a minimum characteristic uplift capacity of 15kN or use supplied BT10/140 screwbolt in GIB HandiBrac® pack.		12 x 150mm galvanised coach screw or use supplied BT10/140 screwbolt in GIB HandiBrac® pack.	

Consent Issued BC170037

Building Consent 170037
Received 16/2/17

GIB HandiBrac® placement with GIBFix® Framing System for concrete floors

Figure 18 shows the preferred positioning of the GIB HandiBrac® panel hold-down brackets within the GIBFix® Framing System layout and where they are required by bracing systems with an 'H' in the specification code.

Note that, in corners and at wall junctions, a single GIB HandiBrac® can serve 'H' type bracing elements in both directions, but additional intermediate concrete anchors may need to be installed to meet the minimum requirements of NZS 3604:2011 for bottom plate fixing.

The GIB HandiBrac® is fixed to the stud which has the GIBFix® Angle.

For bracing elements with sheet material both sides of the wall connect corner studs using 8/90mm gun nails as shown in figure 19.

TIMBER FLOORS

For timber floors bolt fixing in to solid joist or block is required, as shown on p 15.

FIGURE 18: GIB HANDIBRAC® PLACEMENT WITH GIBFIX® FRAMING SYSTEM LAYOUT

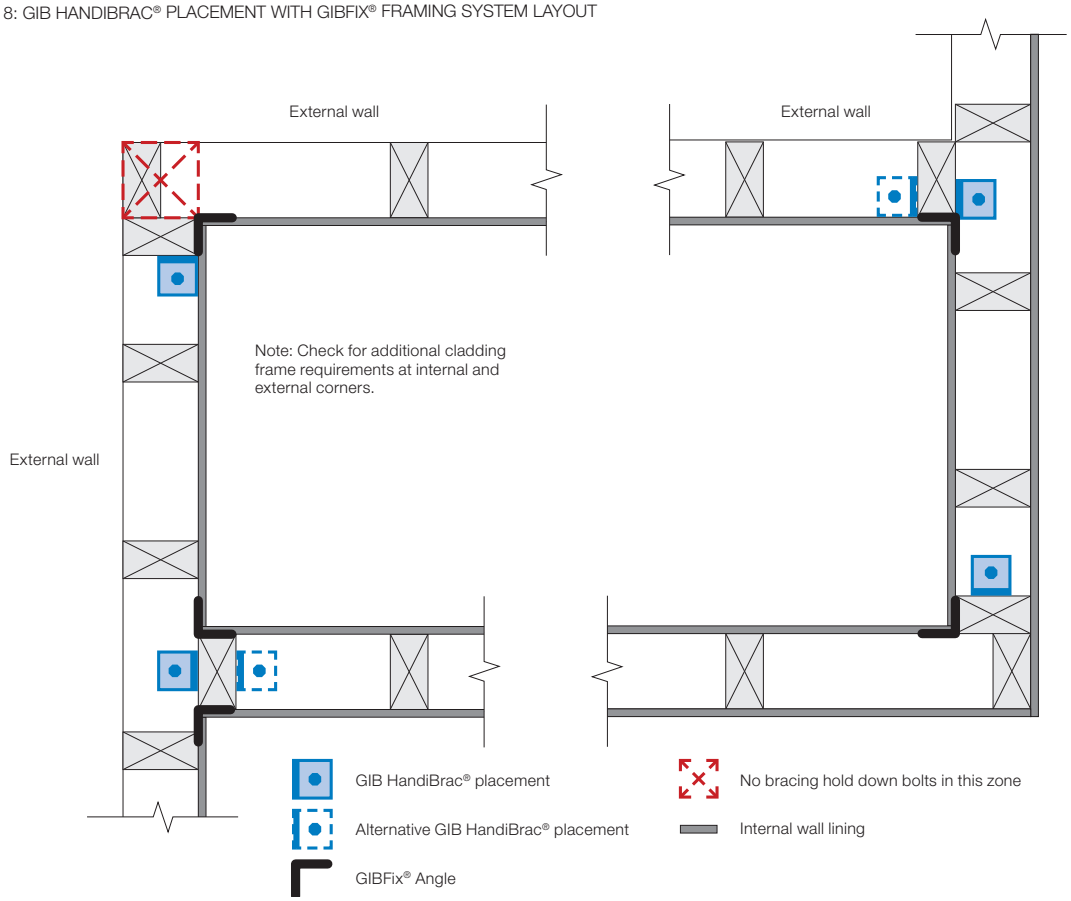

GEB013

FIGURE 19: STUD CONNECTION FOR 'H' TYPE BRACING ELEMENTS WITH SHEET MATERIAL BOTH SIDES

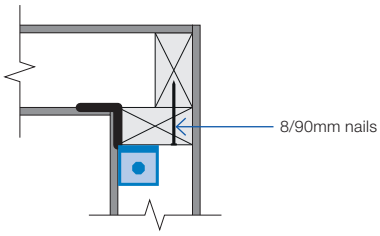

GEB014

Consent Issued BC170037

Building Consent 170037
Received 16/2/17

Ceiling diaphragms

GIB® plasterboard ceiling diaphragms are stiff and strong horizontal elements which effectively transfer loads to bracing walls. They themselves do not have a bracing unit rating but are used when bracing lines exceed 6m separation. The basic shape of a ceiling diaphragm is square or rectangular. Protrusions are permitted but cut-outs are not. The length of a ceiling diaphragm shall not exceed twice its width. Dimensions are measured between supporting bracing lines. Supporting bracing lines shall have a bracing capacity no less than the greater of 100 bracing units or 15 bracing units per metre of diaphragm dimension, measured at right angles to the line being considered, see figure 21.

Limitations for GIB® plasterboard ceiling diaphragms

Ceiling diaphragms may be constructed using any GIB® plasterboard provided perimeter fixing is at;

150mm centres for: Diaphragms up to 7.5m in length, no steeper than 15°.

100mm centres for: Diaphragms up to 7.5m in length, no steeper than 45°. Diaphragms up to 12m in length, no steeper than 25°.

Diaphragms outside these parameters must be specifically designed.

General fixing requirements for GIB® Ceiling Diaphragms:

- Linings must be installed over the entire area of the diaphragm.
- Fastening must be no less than 12mm from sheet edges and not less than 18mm from sheet ends.
- Sheets must be supported by framing members (e.g., ceiling battens) spaced at no more than 500mm centres for 10mm GIB® plasterboard and at no more than 600mm centres for 13mm GIB® plasterboard.
- Sheets within the diaphragm area may be fastened and finished conventionally in accordance with the publication entitled, "GIB® Site Guide". All joints shall be GIB® Joint Tape reinforced and stopped. It is recommended that sheet butt joints are formed off framing and back-blocked (see "GIB® Site Guide").
- Use full width sheets where possible. At least 900mm wide sheets with a length not less than 1800mm shall be used. Sheets less than 900mm wide but no less than 600mm may be used provided all joints with adjacent sheets are back-blocked (see "GIB® Site Guide" and figure 22).
- Fasteners are placed at the specified centres around the ceiling diaphragm with the corners fastened using the GIB EzyBrace® fastener pattern.

FIGURE 20: PROTRUSIONS AND CUTOUTS

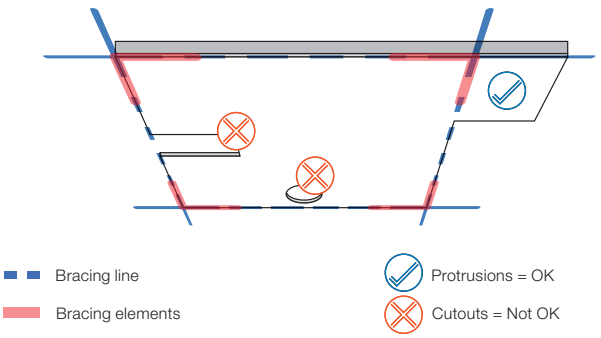

FIGURE 21: DIAPHRAGM BRACING LINING SPACINGS

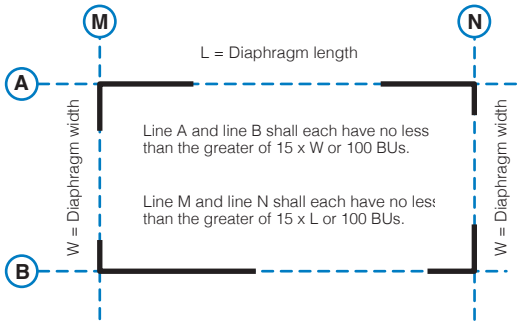

FIGURE 22: GIB® CEILING DIAPHRAGM SHEET WIDTHS AND LENGTHS

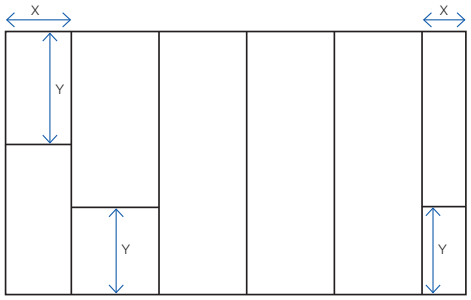

X = 900mm min or 600–900mm min provided all adjacent joints are back-blocked.

Y = 1800mm min sheet lengths at ends of ceiling diaphragms.

FIGURE 23: GIB EZYBRACE® FASTENER PATTERN

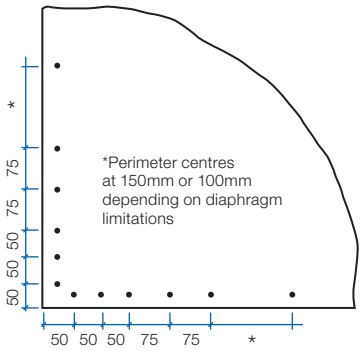

Unless stated all fastener spacings are maximums.

GEB015

Consent Issued BC170037

Building Consent 170037
Received 16/2/17

Ceiling battens in ceiling diaphragms

Ceiling diaphragms may be constructed using steel or timber ceiling battens.

Battens shall be spaced at a maximum of:
- 500mm for 10mm GIB® plasterboard.
- 600mm for 13mm GIB® plasterboard.

Timber battens shall be fixed in accordance with the requirements of NZS 3604:2011.

Metal battens shall be GIB® Rondo® battens with two external flanges of 8mm to allow direct screw fixing to roof framing.

GIB® Rondo® metal battens shall be fixed with 2/32mm x 8g GIB® Grabber® Wafer Head Self Tapping screws to supporting framing.

GIB® Rondo® metal battens must be fixed directly to the roof framing. If a clip system has been used, a timber block (min 300mm) or a continuous timber member can be fixed alongside the bottom chord to permit a direct connection to the batten, see figure 26.

For GIB® Rondo® metal battens, a GIB® Rondo® metal channel or metal angle is required at the perimeter of the diaphragm. The perimeter channel shall be fastened to the top plate with 32mm x 8g GIB® Grabber® Wafer Head Self Tapping screws or 32mm x 7g GIB® Grabber® Dual Thread screw at 300mm centres maximum.

Linings are fastened to metal using 25mm x 6g GIB® Grabber® Self Tapping screws and to timber framing using 32mm x 6g GIB® Grabber® High Thread screws. Alternatively 32mm x 7g GIB® Grabber® Dual Thread screws can be used in both cases. Fastener centres are specified on p.18.

Coved ceiling diaphragms can be achieved by using nominally 32 x 32 x 0.55mm proprietary galvanised metal angles ("back-flashing") at the changes in direction. These angles shall be:
- Fastened at 300mm on each edge to metal battens using 32mm x 8g GIB® Grabber® Wafer Head Self Tapping screws or 32mm x 7g GIB® Grabber® Dual Thread screws.
- Fastened to timber framing using 32mm x 7g GIB® Grabber® Dual Thread screws when linings are installed.

FIGURE 26: GIB® RONDO® METAL CEILING BATTEN INSTALLATION

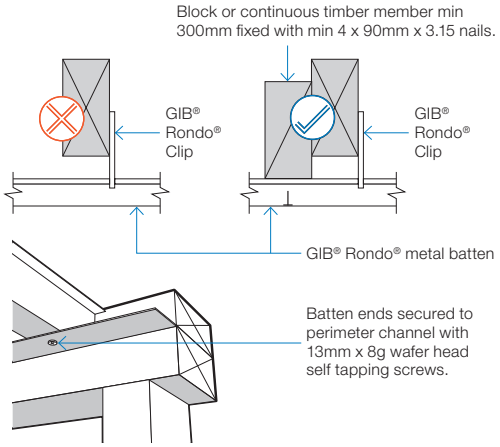

GEB016

FIGURE 27: GIB® RONDO® METAL CEILING BATTENS WITH CORNER ANGLES

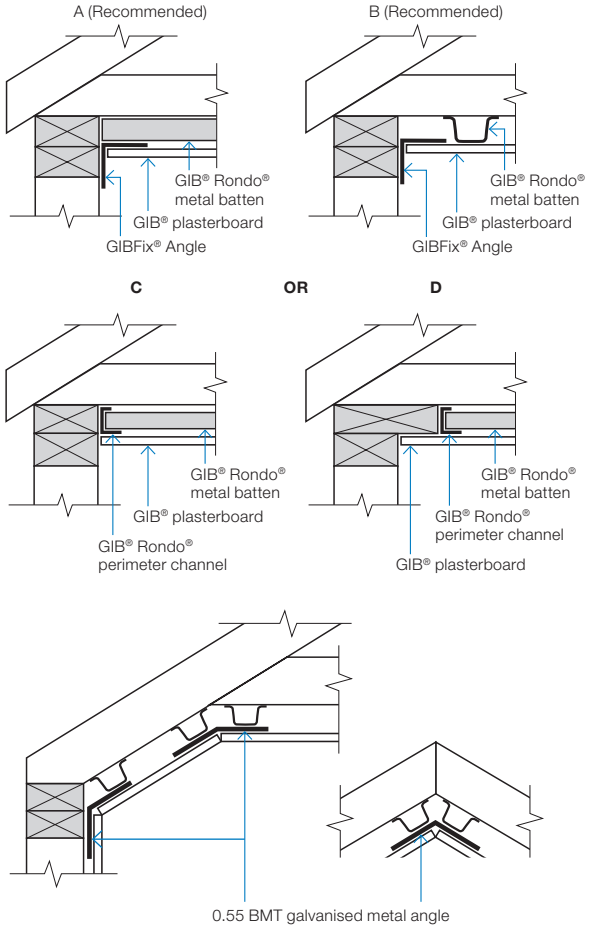

GEB017

FIGURE 28: TIMBER CEILING BATTENS*

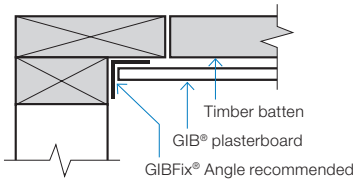

GEB018

Consent Issued BC170037

Building Consent 170037
Received 16/2/17

Openings in ceiling diaphragms

SMALL OPENINGS

Small opening (e.g. down lights) of 90 x 90mm or less may be placed no closer than 90mm to the edge of the ceiling diaphragm.

LARGE OPENINGS

Openings are allowed withing the middle third of the diaphragms length and width. Fixing of sheet material to opening trimmers shall be at 150mm centres. Neither opening dimension shall exceed a third of the diaphragm width. Larger openings or openings in other locations require specific engineering design.

Where fireplace flue or range hood openings are required in a ceiling diaphragm use a galvansed metal backing plate as shown in figure 25, with a maximum hole diameter of 350mm.

Figure 25 can also be used for range hood openings in walls.

For information on openings in ceiling diaphragms contact the GIB® Helpline on 0800 100 442.

FIGURE 24: LARGE OPENINGS IN CEILING DIAPHRAGMS

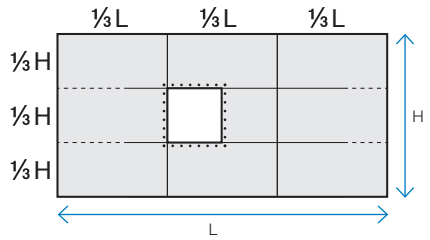

FIGURE 25: FIREPLACE FLUES AND RANGE HOOD OPENINGS

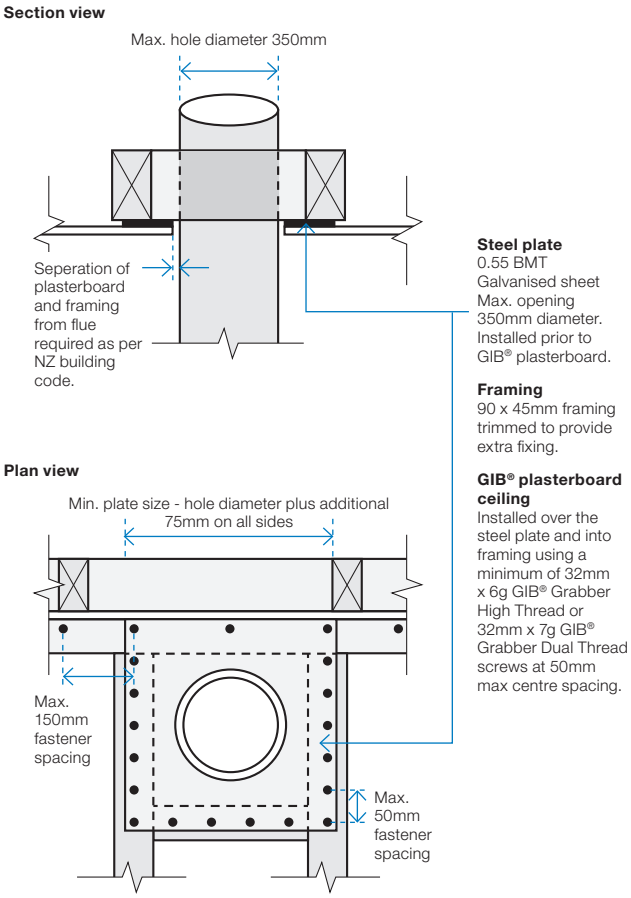

Plasterboard ceiling not shown in plan view

Consent Issued BC170037

Building Consent 170037
Received 16/2/17

Length of GIB EzyBrace® elements ('N' Type)

The length of GIB EzyBrace® elements with an 'N' extension (requiring standard NZS3604:2011 plate connections) can be taken as the full frame length measured from the outside of the end-stud to the opening face as illustrated in figures 29-32.

'N' type GIB EzyBrace® elements are identified by GIB® specification numbers GS1-N, GS2-N and GS2-NOM

The dimension 'L' shall not be less than 400mm.

Perimeter bracing fixing for linings of both 'H' and 'N' type elements is along the top and bottom plates, end stud, and doubling stud immediately adjacent to the opening.

Fastener spacings and diagram scales shown in Figures 29–32 are indicative only. Refer to p.23–30 for construction details.

FIGURE 29: GS BRACING ELEMENTS (OPTION A)

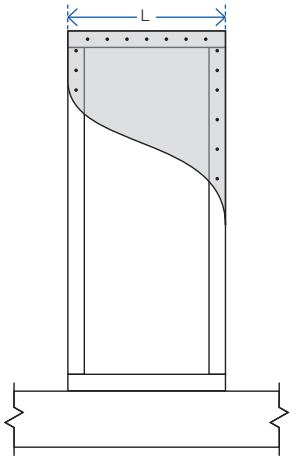

GS1-N, GS2-N elements
'L' indicates the length of the bracing element

FIGURE 30: GS BRACING ELEMENTS (OPTION B)

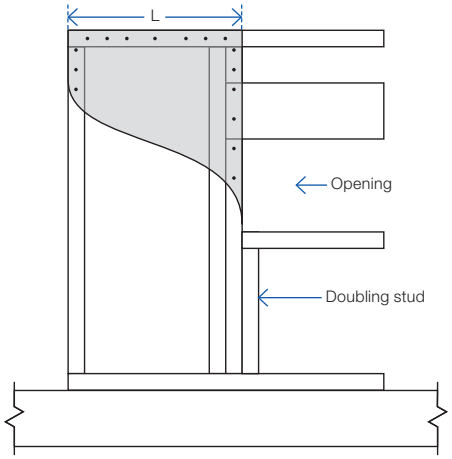

GS1-N, GS2-N elements
'L' indicates the length of the bracing element

FIGURE 31: GS BRACING ELEMENTS (OPTION C)

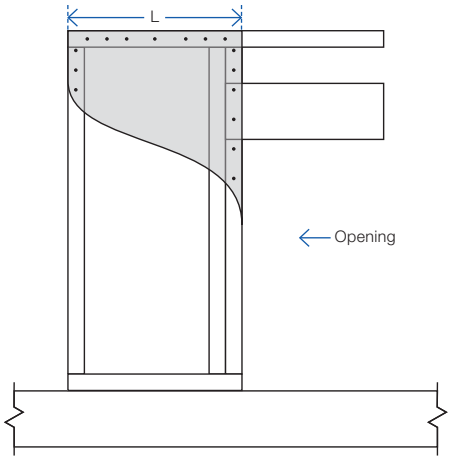

GS1-N, GS2-N elements
'L' indicates the length of the bracing element

FIGURE 32: GS BRACING ELEMENTS (OPTION D)

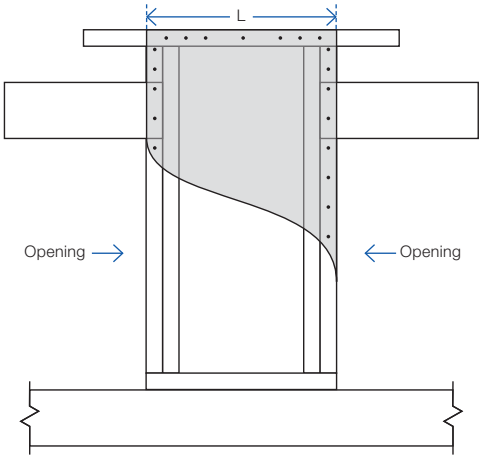

GS1-N, GS2-N elements
'L' indicates the length of the bracing element

Consent Issued BC170037

Building Consent 170037
Received 16/2/17

Length of GIB EzyBrace® elements ('H' Type)

GIB EzyBrace® elements with an 'H' extension (requiring special panel hold-down fixings) can be used when the dimension 'L' as illustrated in figures 33–36 is 400mm or more.

'H' type GIB EzyBrace® elements are identified by GIB® specification numbers GSP-H, BL1-H, BLG-H and BLP-H.

The length of an 'H' type element is not only determined by the sheet material, but also by the placement of the hold-down fixings.

Hold-down fixings cannot be placed closer together than what is shown for the standard panel in figure 33.

Hold-down fixings can be placed under windows provided sill trimming studs beneath the opening are connected to the bracing element using 8/90mm gun nails, as illustrated in figure 34.

Spike doubling stud to trimming stud using a minimum of 2/90mm gun nails at 600mm centres. Lintel straps (where required for wind uplift) should be checked in and be located away from the bracing element fasteners.

Perimeter bracing fixing for linings of both 'H' and 'N' type elements is along the top and bottom plates, end stud, and doubling stud immediately adjacent to the opening as indicated in figures 34-36.

When using bracing straps, installed in accordance with p.17, fix the strap to the same framing member as shown for the GIB Handibrac® below, and install the adjacent anchor bolt in the same position as the GIB HandiBrac® bolt.

Fastener spacings and diagram scales shown in figures 33–36 are indicative only. Refer to p.23–30 for construction details.

FIGURE 33: BL BRACING ELEMENTS (OPTION A)

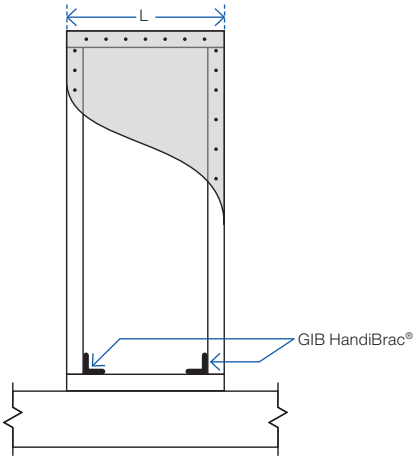

'H' type elements with specific hold downs
'L' indicates the length of the bracing element

FIGURE 34: BL BRACING ELEMENTS (OPTION B)

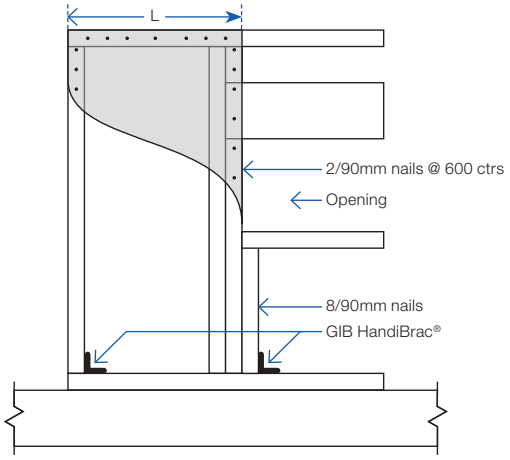

'H' type elements with specific hold downs
'L' indicates the length of the bracing element

FIGURE 35: BL BRACING ELEMENTS (OPTION C)

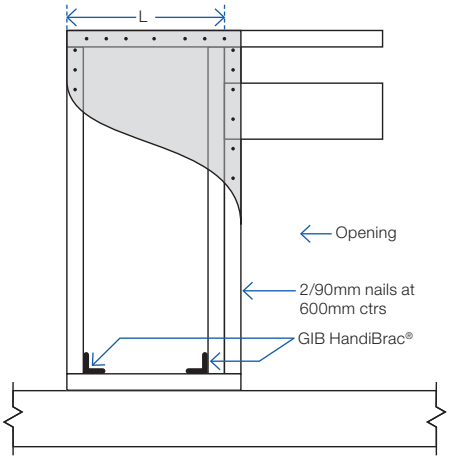

'H' type elements with specific hold downs
'L' indicates the length of the bracing element

FIGURE 36: BL BRACING ELEMENTS (OPTION D)

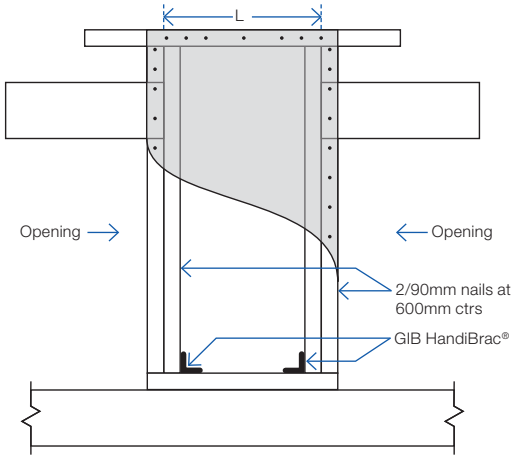

'H' type elements with specific hold downs
'L' indicates the length of the bracing element

Consent Issued BC170037

Building Consent 170037
Received 16/2/17

GIB EzyBrace® Systems specification GS1-N

Specification code	Minimum length (m)	Lining requirement
GS1-N	0.4	Any 10mm or 13mm GIB® Standard plasterboard to one side only

WALL FRAMING

Wall framing to comply with;

- NZBC B1 — Structure B1/AS1 Clause 3 Timber (NZS 3604:2011).
- NZBC B2 — Durability B2/AS1 Clause 3.2 Timber (NZS 3602).

Framing dimensions and height as determined by NZS 3604:2011 stud and top plate tables for load bearing and non-bearing walls. The use of kiln dried stress graded timber is recommended.

BOTTOM PLATE FIXING

Timber floor

Pairs of hand driven 100 x 3.75mm nails at 600mm centres; or three power driven 90 x 3.15mm nails at 600mm centres.

Concrete floor

Internal Wall Bracing Lines: In accordance with the requirements of NZS 3604:2011 for internal wall plate fixing or 75 x 3.8mm shot fired fasteners with 16mm discs spaced at 150mm and 300mm from end studs and 600mm centres thereafter.

External Wall Bracing Lines: In accordance with the requirements of NZS 3604:2011 for external wall bottom plate fixing.

WALL LINING

- Any 10mm or 13mm GIB® plasterboard lining.
- Sheets can be fixed vertically or horizontally.
- Sheet joints shall be touch fitted.
- Use full length sheets where possible.

PERMITTED ALTERNATIVES

For permitted GIB® plasterboard alternatives refer to p. 5 in GIB EzyBrace® Systems literature.

FASTENING THE LINING

Fasteners

32mm x 6g GIB® Grabber® High Thread Screws, 32mm x 7g GIB® Grabber® Dual Thread Screws or 30mm GIB® Nails. If using the GIBFix® Angle use only 32mm x 7g GIB® Grabber® Dual Thread Screws.

Fastener centres

50,100,150, 225, 300mm maximum from each corner and 150mm thereafter around the perimeter of the bracing element. For vertically fixed sheets place fasteners at 300mm maximum centres to intermediate sheet joints. For horizontally fixed sheets place single fasteners to the sheet edge where it crosses the stud. Use daubs of GIBFix® adhesive at 300mm maximum centres to intermediate studs. Place fasteners no closer than 12mm from paper bound sheet edges and 18mm from any sheet end or cut edge.

JOINTING

Joint strength is important in delivering bracing system performance. All fastener heads stopped and all sheet joints GIB® Joint Tape reinforced and stopped in accordance with the GIB® Site Guide.

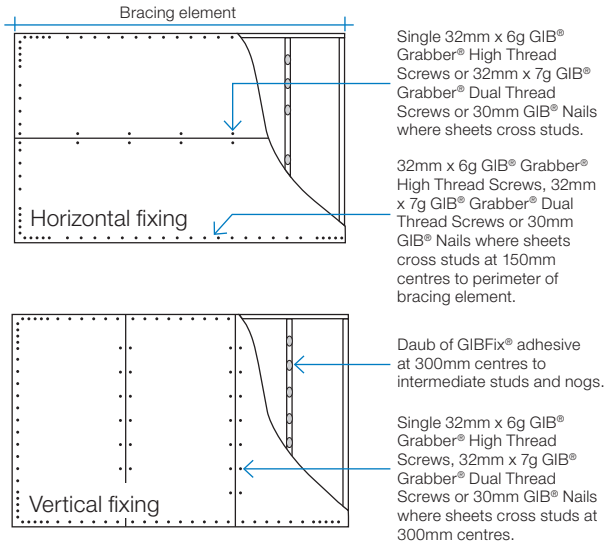

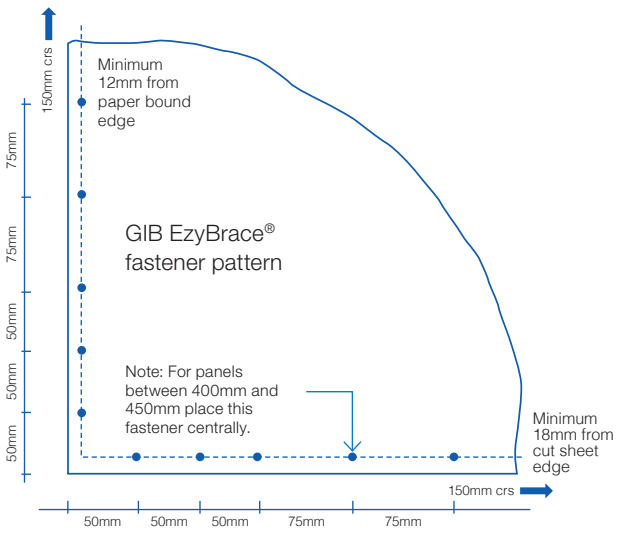

Unless stated all fastener spacings are maximums.

In order for GIB® systems to perform as tested, all components must be installed exactly as prescribed. Substituting components produces an entirely different system and may seriously compromise performance. Follow the specifications. This specification sheet is issued in conjunction with the publication GIB EzyBrace® Systems

Consent Issued BC170037

Building Consent 170037
Received 16/2/17

GIB EzyBrace® Systems specification GS2-NOM

Specification code	Minimum length (m)	Lining requirement
GS2-NOM	0.4	Any 10mm or 13mm GIB® Standard plasterboard fixed to each side of the wall framing

WALL FRAMING

Wall framing to comply with;

- NZBC B1 — Structure B1/AS1 Clause 3 Timber (NZS 3604:2011).
- NZBC B2 — Durability B2/AS1 Clause 3.2 Timber (NZS 3602).

Framing dimensions and height as determined by NZS 3604:2011 stud and top plate tables for load bearing and non-bearing walls. The use of kiln dried stress graded timber is recommended.

BOTTOM PLATE FIXING

Timber floor

Pairs of hand driven 100mm x 3.75mm nails at 600mm centres; or three power driven 90mm x 3.15mm nails at 600mm centres.

Concrete floor

Internal Wall Bracing Lines: In accordance with the requirements of NZS 3604:2011 for internal wall plate fixing or 75mm x 3.8mm shot fired fasteners with 16mm discs spaced at 150mm and 300mm from end studs and then 600mm centres thereafter.

WALL LINING

- A layer of 10mm or 13mm GIB® plasterboard to each side of the wall.
- Sheets can be fixed vertically or horizontally.
- Sheet joints shall be touch fitted.
- Use full length sheets where possible.

PERMITTED ALTERNATIVES

For permitted GIB® plasterboard alternatives refer to p. 5 in GIB EzyBrace® Systems literature.

FASTENING THE LINING

Fasteners

32mm x 6g GIB® Grabber® High Thread Screws or 32mm x 7g GIB® Grabber® Dual Thread Screws. If using the GIBFix® Angle use 32mm x 7g GIB® Grabber® Dual Thread Screws.

Fastener centres

50, 300mm from each corner and 300mm maximum thereafter around the perimeter of the bracing element. For horizontally fixed sheets place single fasteners to the sheet edge where it crosses the stud. Use daubs of GIBFix® adhesive at 300mm maximum centres to intermediate studs. Place fasteners no closer than 12mm from paper bound sheet edges and 18mm from any sheet end or cut edge.

JOINTING

Joint strength is important in delivering bracing system performance. All fastener heads stopped and all sheet joints GIB® Joint Tape reinforced and stopped in accordance with the GIB® Site Guide.

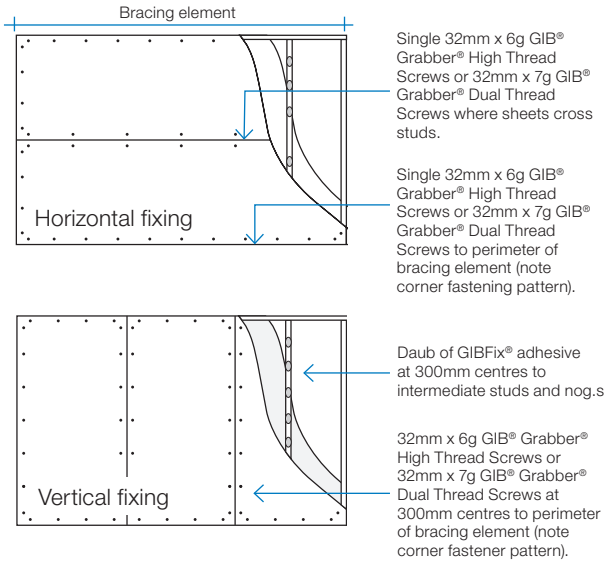

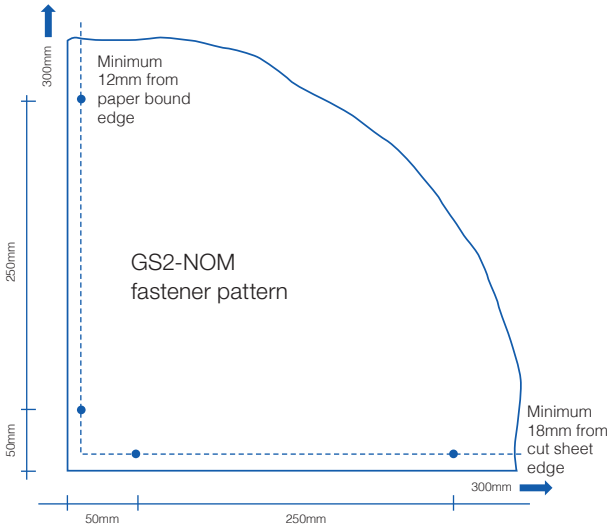

Unless stated all fastener spacings are maximums.

In order for GIB® systems to perform as tested, all components must be installed exactly as prescribed. Substituting components produces an entirely different system and may seriously compromise performance. Follow the specifications. This specification sheet is issued in conjunction with the publication GIB EzyBrace® Systems

Consent Issued BC170037

Building Consent 170037
Received 16/2/17

GS2-NOM ADHESIVE FIXING OPTION AT DOOR JAMBS

As an alternative to using screw fixings, a continuous 6-10mm bead of solvent based GIBFix® All-Bond can be applied along the full height studs immediately adjacent to an internal door opening and at the door lintel or head trimmer. The lining is then bedded into the adhesive and installed into the rebated jamb, as shown in figure 38.

This solvent based adhesive option may only be used with GS2-NOM specification and is designed to reduce popping of fasteners around door openings on internal walls.

FIGURE 37: SCREW FIX FOR OPENINGS

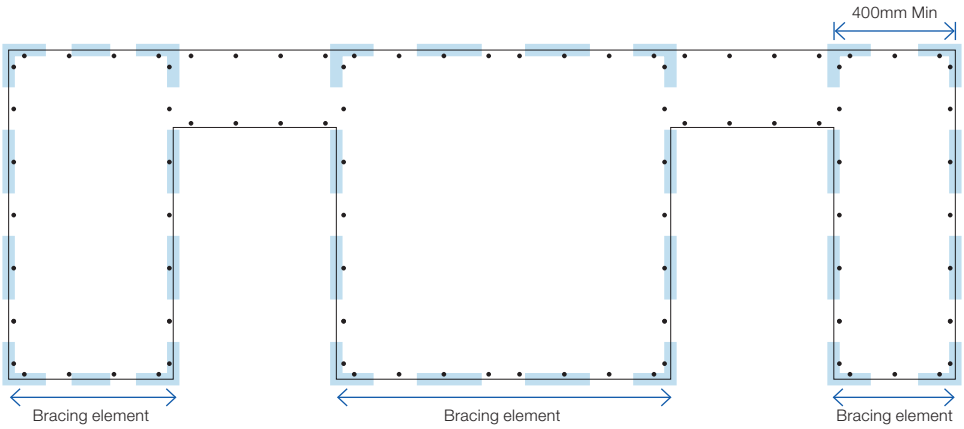

FIGURE 38: SCREW AND ADHESIVE FIX FOR OPENINGS

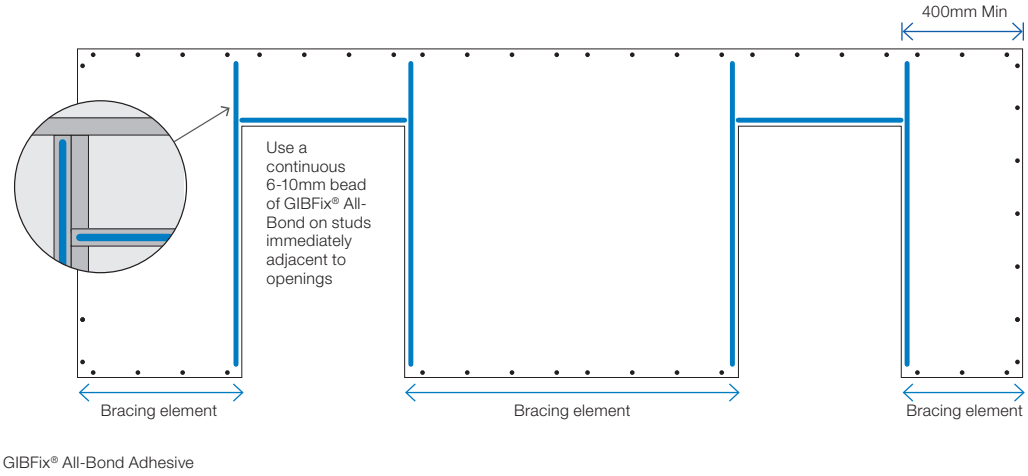

ADHESIVE NOZZLE APERTURE

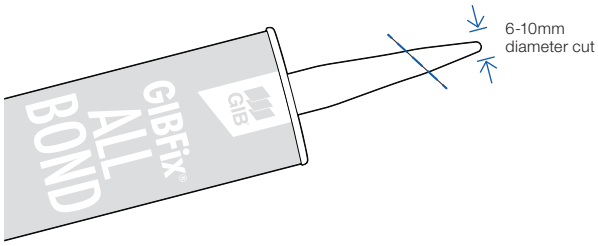

Consent Issued BC170037

Building Consent 170037
Received 16/2/17

GIB EzyBrace® Systems specification GS2-N

Specification code	Minimum length (m)	Lining requirement
GS2-N	0.4	Any 10mm or 13mm GIB® Standard plasterboard fixed to each side of the wall framing

WALL FRAMING

Wall framing to comply with;

- NZBC B1 — Structure B1/AS1 Clause 3 Timber (NZS 3604:2011).
- NZBC B2 — Durability B2/AS1 Clause 3.2 Timber (NZS 3602).

Framing dimensions and height as determined by NZS 3604:2011 stud and top plate tables for load bearing and non-bearing walls. The use of kiln dried stress graded timber is recommended.

BOTTOM PLATE FIXING

Timber Floor

Pairs of hand driven 100 x 3.75mm nails at 600mm centres; or three power driven 90 x 3.15mm nails at 600mm centres.

Concrete floor

Internal Wall Bracing Lines: In accordance with the requirements of NZS 3604:2011 for internal wall plate fixing or 75 x 3.8mm shot fired fasteners with 16mm discs spaced at 150mm and 300mm from end studs and then 600mm centres thereafter.

WALL LINING

- A layer of 10mm or 13mm GIB® plasterboard to each side of the wall.
- Sheets can be fixed vertically or horizontally.
- Sheet joints shall be touch fitted.
- Use full length sheets where possible.

PERMITTED ALTERNATIVES

For permitted GIB® plasterboard alternatives refer to p. 5 in GIB EzyBrace® Systems literature.

FASTENING THE LINING

Fasteners

32mm x 6g GIB® Grabber® High Thread Screws,32mm x 7g GIB® Grabber® Dual Thread Screws or 30mm GIB® Nails. If using the GIBFix® Angle use only 32mm x 7g GIB® Grabber® Dual Thread Screws.

Fastener centres

50,100,150, 225, 300mm maximum from each corner and 150mm thereafter around the perimeter of the bracing element. For vertically fixed sheets place fasteners at 300mm maximum centres to intermediate sheet joints. For horizontally fixed sheets place single fasteners to the sheet edge where it crosses the stud. Use daubs of GIBFix® adhesive at 300mm maximum centres to intermediate studs. Place fasteners no closer than 12mm from paper bound sheet edges and 18mm from any sheet end or cut edge.

JOINTING

Joint strength is important in delivering bracing system performance. All fastener heads stopped and all sheet joints GIB® Joint Tape reinforced and stopped in accordance with the GIB® Site Guide.

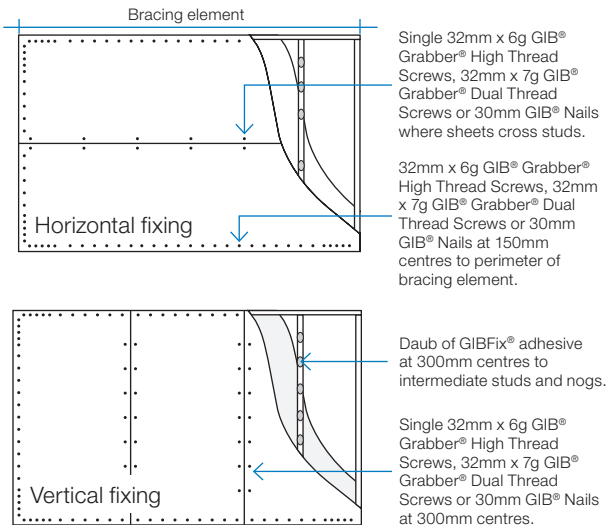

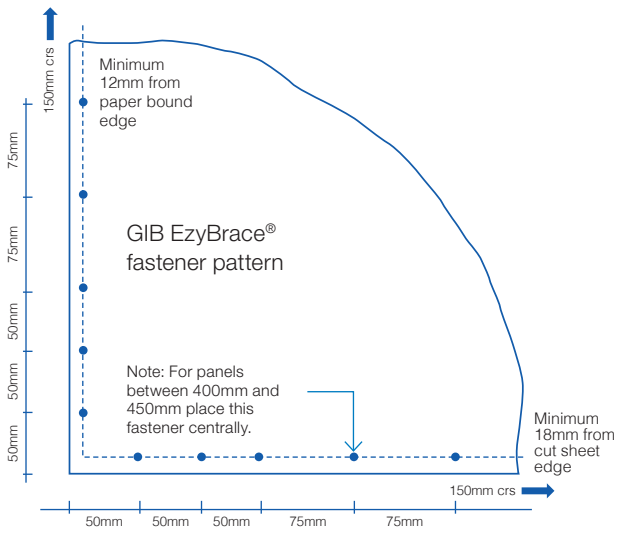

Unless stated all fastener spacings are maximums.

In order for GIB® systems to perform as tested, all components must be installed exactly as prescribed. Substituting components produces an entirely different system and may seriously compromise performance. Follow the specifications. This specification sheet is issued in conjunction with the publication GIB EzyBrace® Systems

Consent Issued BC170037

Building Consent 170037
Received 16/2/17

GIB EzyBrace® Systems specification GSP-H

Specification Code	Minimum length (m)	Lining requirement	Other requirements
GSP-H	0.4	Any 10mm or 13mm GIB® plasterboard lining to one side of framing and minimum 7mm structural plywood manufactured to AS/NZ 2269.0 :2012 to the other side	Hold downs

WALL FRAMING

Wall framing to comply with;

- NZBC B1 — Structure B1/AS1 Clause 3 Timber (NZS 3604:2011).
- NZBC B2 — Durability B2/AS1 Clause 3.2 Timber (NZS 3602).

Framing dimensions and height as determined by NZS 3604:2011 stud and top plate tables for load bearing and non-bearing walls. The use of kiln dried stress graded timber is recommended.

BOTTOM PLATE FIXING

Timber floor

Use panel hold downs at each end of the bracing element. The GIB HandiBrac® is recommended. See details in GIB EzyBrace® Systems or GIB® Site Guide.

Pairs of hand driven 100 x 3.75mm nails at 600mm centres; or Three power driven 90 x 3.15mm nails at 600mm centres.

Concrete floor

Use panel hold downs at each end of the bracing element. The GIB HandiBrac® is recommended. See details in GIB EzyBrace® Systems or GIB® Site Guide. Within the length of the bracing element bottom plates are to be fixed in accordance with the requirements of NZS 3604:2011.

WALL LINING

- A layer of 10mm or 13mm GIB® plasterboard to one side of the wall plus minimum 7mm structural plywood manufactured to AS/NZ 2269.0 :2012 to the other side.
- Sheets can be fixed vertically or horizontally, with edges supported.
- Sheet joints shall be touch fitted.
- Use full length sheets where possible.

PERMITTED ALTERNATIVES

For permitted GIB® plasterboard alternatives refer to p. 5 in GIB EzyBrace® Systems literature.

FASTENING THE LINING

Fasteners

32mm x 6g GIB® Grabber® High Thread Screws, 32mm x 7g GIB® Grabber® Dual Thread Screws or 30mm GIB® Nails.

If using the GIBFix® Framing System or if fastening through GIBFix® Angles use only 32mm x 7g GIB® Grabber® Dual Thread Screws. Plywood: 50 x 2.8mm Galv or Stainless steel annular grooved FH nails.

Fastener centres

GIB® plasterboard side: 50,100,150, 225, 300mm maximum from each corner and 150mm thereafter around the perimeter of the bracing element. For vertically fixed sheets place fasteners at 300mm maximum centres to the intermediate sheet joints. For horizontally fixed sheets place single fasteners to the sheet edge where it crosses the stud. Use daubs of GIBFix® adhesive at 300mm maximum centres to intermediate studs. Place fasteners no closer than 12mm from paper bound sheet edges and 18mm from any sheet end or cut edge. Plywood side: 150mm centres to the perimeter of each sheet. GIB® corner fastener pattern does not apply to the plywood side. 300mm centres to intermediate studs.

JOINTING

Joint strength is important in delivering bracing system performance. All fastener heads stopped and all sheet joints GIB® Joint Tape reinforced and stopped in accordance with the GIB® Site Guide.

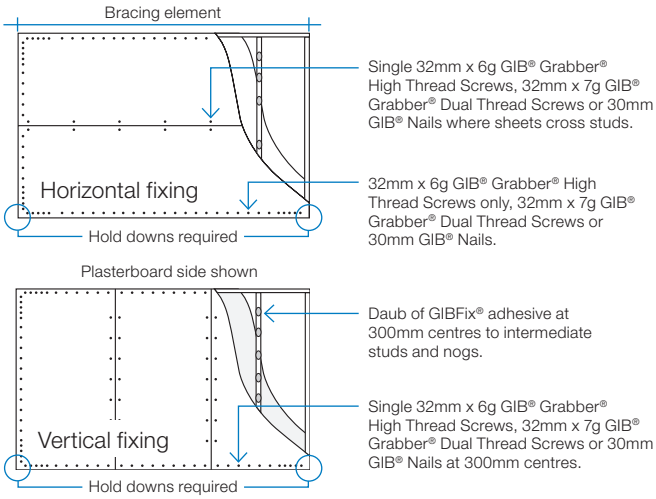

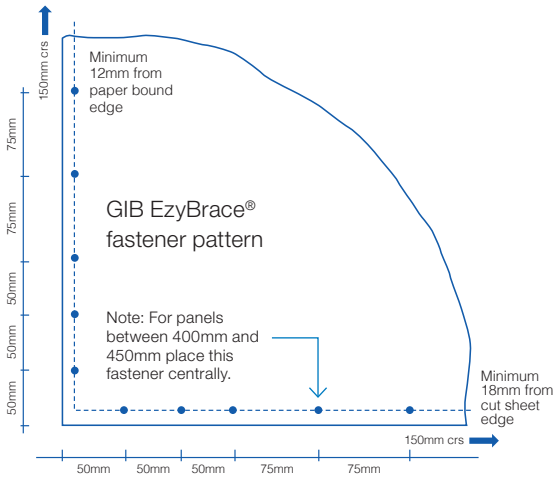

Unless stated all fastener spacings are maximums.

In order for GIB® systems to perform as tested, all components must be installed exactly as prescribed. Substituting components produces an entirely different system and may seriously compromise performance. Follow the specifications. This specification sheet is issued in conjunction with the publication GIB EzyBrace® Systems

Consent Issued BC170037

Building Consent 170037
Received 16/2/17

GIB EzyBrace® Systems specification BL1-H

Specification code	Minimum length (m)	Lining requirement	Other requirements
BL1-H	0.4	10mm or 13mm GIB Braceline® to one side only	Hold downs

WALL FRAMING

Wall framing to comply with;

- NZBC B1 — Structure B1/AS1 Clause 3 Timber (NZS 3604:2011).
- NZBC B2 — Durability B2/AS1 Clause 3.2 Timber (NZS 3602).

Framing dimensions and height as determined by NZS 3604:2011 stud and top plate tables for load bearing and non-bearing walls. The use of kiln dried stress graded timber is recommended.

BOTTOM PLATE FIXING

Timber floor

Use panel hold downs at each end of the bracing element. The GIB HandiBrac® is recommended. See details in GIB EzyBrace® Systems or GIB® Site Guide.

Pairs of hand driven 100 x 3.75mm nails at 600mm centres; or Three power driven 90 x 3.15mm nails at 600mm centres.

Concrete floor

Use panel hold downs at each end of the bracing element. The GIB HandiBrac® is recommended. See details in GIB EzyBrace® Systems or GIB® Site Guide. Within the length of the bracing element bottom plates are to be fixed in accordance with the requirements of NZS 3604:2011.

WALL LINING

- A layer of 10mm or 13mm GIB Braceline®.
- Sheets can be fixed vertically or horizontally.
- Sheet joints shall be touch fitted.
- Use full length sheets where possible.

PERMITTED ALTERNATIVES

For permitted GIB® plasterboard alternatives refer to p. 5 in GIB EzyBrace® Systems literature.

FASTENING THE LINING

Fasteners

32mm x 6g GIB® Grabber® High Thread Screws or 32mm x 7g GIB® Grabber® Dual Thread Screws. If using the GIBFix® Framing System or if fastening through GIBFix® Angles use only 32mm x 7g GIB® Grabber® Dual Thread Screws.

Fastener centres

50,100,150, 225, 300mm from maximum each corner and 150mm thereafter around the perimeter of the bracing element. For vertically fixed sheets place fasteners at 300mm maximum centres to the sheet joint. For horizontally fixed sheets place single fasteners to the sheet edge where it crosses the stud. Use daubs of GIBFix® adhesive at 300mm maximum centres to intermediate studs. Place fasteners no closer than 12mm from paper bound sheet edges and 18mm from any sheet end or cut edge.

JOINTING

Joint strength is important in delivering bracing system performance. All fastener heads stopped and all sheet joints GIB® Joint Tape reinforced and stopped in accordance with the GIB® Site Guide.

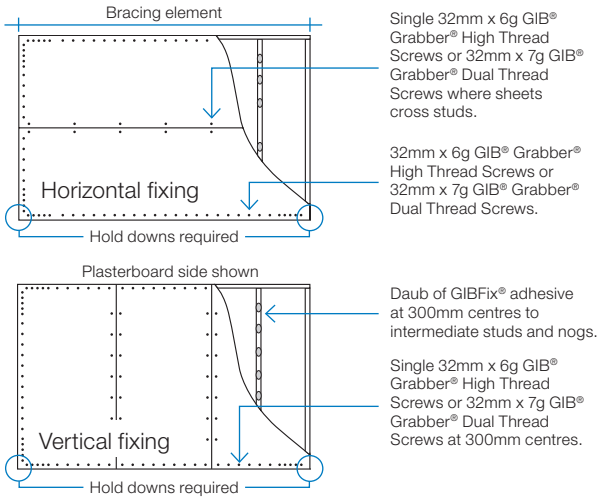

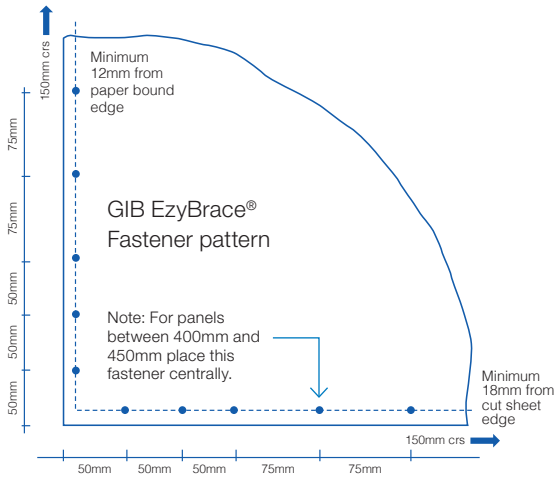

Unless stated all fastener spacings are maximums.

In order for GIB® systems to perform as tested, all components must be installed exactly as prescribed. Substituting components produces an entirely different system and may seriously compromise performance. Follow the specifications. This specification sheet is issued in conjunction with the publication GIB EzyBrace® Systems

Consent Issued BC170037

Building Consent 170037
Received 16/2/17

GIB EzyBrace® Systems specification BLG-H

Specification code	Minimum length (m)	Lining requirement	Other requirements
BLG-H	0.4	10mm or 13mm GIB Braceline® to one side of the frame plus any 10mm or 13mm GIB® plasterboard to the other side	Hold downs

WALL FRAMING

Wall framing to comply with;

- NZBC B1 — Structure B1/AS1 Clause 3 Timber (NZS 3604:2011).
- NZBC B2 — Durability B2/AS1 Clause 3.2 Timber (NZS 3602).

Framing dimensions and height as determined by NZS 3604:2011 stud and top plate tables for load bearing and non-bearing walls. The use of kiln dried stress graded timber is recommended.

BOTTOM PLATE FIXING

Timber floor

Use panel hold downs at each end of the bracing element. The GIB HandiBrac® is recommended. See details in GIB EzyBrace® Systems or GIB® Site Guide. Pairs of hand driven 100 x 3.75mm nails at 600mm centres; or Three power driven 90 x 3.15mm nails at 600mm centres.

Concrete floor

Use panel hold downs at each end of the bracing element. The GIB HandiBrac® is recommended. See details in GIB EzyBrace® Systems 2011 or GIB® Site Guide. Within the length of the bracing element bottom plates are to be fixed in accordance with the requirements of NZS 3604:2011.

WALL LINING

- A layer of 10mm or 13mm GIB Braceline® to one side of the wall plus any 10mm or 13mm GIB® plasterboard lining to the other side.
- Sheets can be fixed vertically or horizontally.
- Sheet joints shall be touch fitted.
- Use full length sheets where possible.

PERMITTED ALTERNATIVES

For permitted GIB® plasterboard alternatives refer to p. 5 in GIB EzyBrace® Systems literature.

FASTENING THE LINING

Fasteners

GIB Braceline® side: 32mm x 6g GIB® Grabber® High Thread Screws or 32mm x 7g GIB® Grabber® Dual Thread Screws.Other side: 32mm x 6g GIB® Grabber® High Thread Screws, 30mm GIB Nails or 32mm x 7g GIB® Grabber® Dual Thread Screws.

If using the GIBFix® Framing System or if fastening through GIBFix® Angles use only 32mm x 7g GIB® Grabber® Dual Thread Screws.

Fastener centres

50,100,150, 225, 300mm maximum from each corner and then 150mm thereafter around the perimeter of the bracing element. For vertically fixed sheets place fasteners at 300mm maximum centres to the intermediate sheet joints. For horizontally fixed sheets place single fasteners to the sheet edge where it crosses the stud. Use daubs of GIBFix® adhesive at 300mm maximum centres to intermediate studs. Place fasteners no closer than 12mm from paper bound sheet edges and 18mm from any sheet end or cut edge.

JOINTING

Joint strength is important in delivering bracing system performance. All fastener heads stopped and all sheet joints GIB® Joint Tape reinforced and stopped in accordance with the GIB® Site Guide.

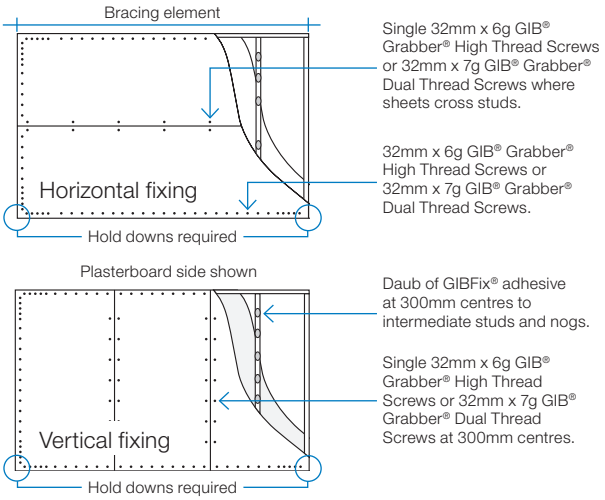

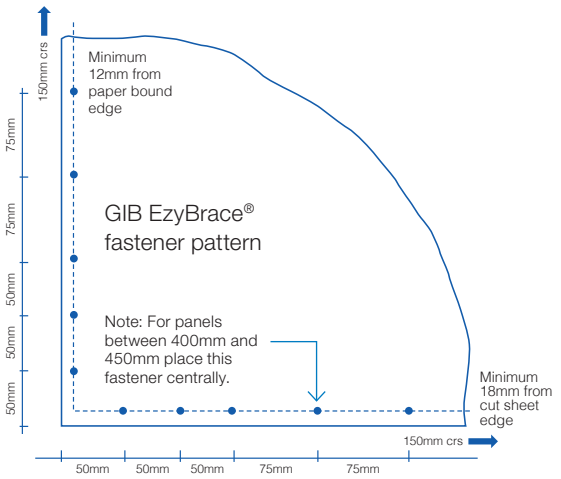

Unless stated all fastener spacings are maximums.

In order for GIB® systems to perform as tested, all components must be installed exactly as prescribed. Substituting components produces an entirely different system and may seriously compromise performance. Follow the specifications. This specification sheet is issued in conjunction with the publication GIB EzyBrace® Systems

Consent Issued BC170037

Building Consent 170037
Received 16/2/17

GIB EzyBrace® Systems specification BLP-H

Specification code	Minimum length (m)	Lining requirement	Other requirements
BLP-H	0.4	10mm or 13mm GIB Braceline® to one side of the frame plus minimum 7mm structural plywood manufactured to AS/NZ 2269.0 :2012 to the other side	Hold downs

WALL FRAMING

Wall framing to comply with;

- NZBC B1 — Structure; B1/AS1 Clause 3 Timber (NZS 3604:2011).
- NZBC B2 — Durability B2/AS1 Clause 3.2 Timber (NZS 3602).

Framing dimensions and height as determined by NZS 3604:2011 stud and top plate tables for load bearing and non-bearing walls. The use of kiln dried stress graded timber is recommended.

BOTTOM PLATE FIXING

Timber floor

Use panel hold downs at each end of the bracing element. The GIB® HandiBrac is recommended. See details in GIB EzyBrace® Systems or GIB® Site Guide.

Pairs of hand driven 100 x 3.75mm nails at 600mm centres; or Three power driven 90 x 3.15mm nails at 600mm centres.

Concrete floor

Use panel hold downs at each end of the bracing element. The GIB HandiBrac® is recommended. See details in GIB EzyBrace® Systems or GIB® Site Guide. Within the length of the bracing element bottom plates are to be fixed in accordance with the requirements of AS/NZ 2269/0 :2012.

WALL LINING

- A layer of 10mm or 13mm GIB Braceline® to one side of the wall plus minimum 7mm structural plywood manufactured to AS/NZS 2269.0 :2012 to the other side.
- Sheets can be fixed vertically or horizontally.
- Plywood is to be fixed vertically with edges supported.
- Sheet joints shall be touch fitted.
- Use full length sheets where possible.

PERMITTED ALTERNATIVES

For permitted GIB® plasterboard alternatives refer to p. 5 in GIB EzyBrace® Systems literature.

FASTENING THE LINING

Fasteners

GIB Braceline® side: 32mm x 6g GIB® Grabber® High Thread Screws or 32mm x 7g GIB® Grabber® Dual Thread Screws. Plywood: 50 x 2.8mm Galv or Stainless steel annular grooved FH nails. If using the GIBFix® Framing System or if fastening through GIBFix® Angles use only 32mm x 7g GIB® Grabber® Dual Thread Screws.

Fastener centres

GIB® Plasterboard side: 50,100,150, 225, 300mm from each corner and then 150mm thereafter around the perimeter of the bracing element. For vertically fixed sheets place fasteners at 300mm centres to the intermediate sheet joints. For horizontally fixed sheets place single fasteners to the sheet edge where it crosses the stud. Use daubs of GIBFix® adhesive at 300mm centres to intermediate studs. Place fasteners no closer than 12mm from paper bound sheet edges and 18mm from any sheet end or cut edge. Plywood side: 150mm centres to the perimeter of each sheet. GIB® corner fastener pattern does not apply to the plywood side. 300mm centres to intermediate studs.

JOINTING

Joint strength is important in delivering bracing system performance. All fastener heads stopped and all sheet joints GIB® Joint Tape reinforced and stopped in accordance with the GIB® Site Guide.

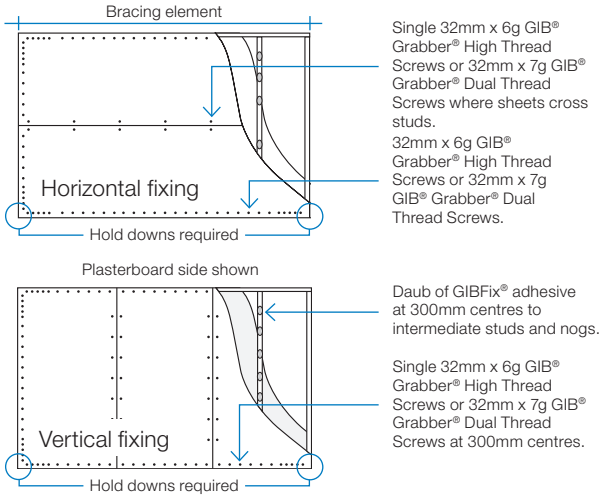

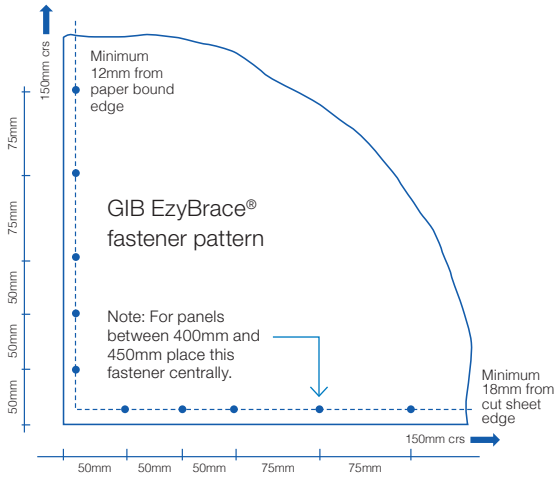

Unless stated all fastener spacings are maximums.

In order for GIB® systems to perform as tested, all components must be installed exactly as prescribed. Substituting components produces an entirely different system and may seriously compromise performance. Follow the specifications. This specification sheet is issued in conjunction with the publication GIB EzyBrace® Systems

Consent Issued BC170037

Building Consent 170037
Received 16/2/17

Winstone Wallboards is committed to protecting the environment. Environmental matters are integrated into all business activities:

- Our operations strive to exceed all environmental regulatory requirements at all times.
- Protection of the environment is a day to day responsibility that we all must accept.
- We allocate appropriate management time and resources to address relevant environmental issues and continuously improve our activities in that area.
- We will achieve our standards of performance through positive action, employee involvement and constant communication with our neighbours, local authorities and customers.

Minimise on-site waste when designing and/or installing GIB® Systems. For larger projects give consideration to our cut-to-length service to reduce waste. GIB® plasterboard off-cuts, if separated from other waste building materials, can be readily recycled.

For larger projects waste can be diverted to compost manufacturers who grind up the GIB® plasterboard and use it in compost. For smaller projects, the GIB® plasterboard can be ground up and spread around the building site.

GLOBAL GREENTAG CERTTM

The Global GreenTag CertTM certified eco-label acknowledges product as meeting the GreenRate Standard set by Global GreenTag.CertTM

GIB® plasterboard has a Level B green rating.

DECLARE CERTIFICATION

Declare is a database of non-toxic, sustainably sourced building products.

Many GIB® plasterboard products including GIB® Standard, GIB Braceline,® GIB Noiseline® and GIB Aqualine® have achieved Red List Free status in Declare certification.

For more information on Winstone Wallboards sustainability commitments visit gib.co.nz.

COPYRIGHT

Copyright © Winstone Wallboards Ltd 2016. All of the material contained in this brochure, including all text, tables, charts, graphs, drawings, images, diagrams are protected by copyright. These materials may not be reproduced, adapted or transmitted in any form by any process, without the permission of Winstone Wallboards Ltd.

Winstone Wallboards asserts its moral rights and reserves all other intellectual property rights in the materials contained in this brochure and related to GIBFix® Framing System and GIB EzyBrace® Systems.

TRADEMARKS

The names GIB,® GIB Fyreline,® GIB Ultraline,® GIB Braceline,® GIB Toughline,® GIB Noiseline,® GIB Aqualine,® GIB Nail,® GIB Tradeset,® GIB Plus 4,® GIB-Cove,® GIB Lite Blue,® GIBFix,® the colour mauve for GIB Toughline,® GIB HandiBrac,® GIB EzyBrace,® the colour blue for GIB Braceline,® the colour pink for GIB Fyreline,® the colour green for GIB Aqualine,® and the shield device are registered trademarks of Fletcher Building Holdings Limited.

PATENTS

GIBFix® Framing System and GIB EzyBrace® Systems, including componentry and design method, have patents pending (NZ Patent Number 596691, NZ Patent 709159 pending) and design and other IP rights.

Consent Issued BC170037

Building Consent 170037
Received 16/2/17

GIB®

FOR MORE INFORMATION VISIT

gib.co.nz

OR CALL THE GIB® HELPLINE

0800 100 442

Consent Issued BC170037

BC170037

3.3 ECOPLY® BRACING SPECIFICATION – EP1

SINGLE SIDED STRUCTURAL PLYWOOD BRACE

Specification No.	Minimum Wall Length	Lining Requirements	BUs/m Wind	BUs/m Earthquake
EP1	0.6 m	7 mm Ecoply® or Ecoply Barrier one side	125	130

Framing

Wall framing must comply with:

- NZBC B1 - Structure: AS1 Clause 3 Timber (NZS 3604:2011)
- NZBC B2 - Durability: AS1 Clause 3.2 Timber (NZS 3602)

Framing dimensions and height are as determined by the NZS 3604 stud and top plate tables for load bearing and non load bearing walls. Kiln dried verified structural grade timber must be used. Machine stress graded timber, such as Laserframe®, is recommended.

Bottom plate fixing

Use GIB Handibrac® hold-down connections at each end of the bracing element. Refer to manufacturer installation instructions supplied with the connectors for correct installation instructions and bolt types to be used for either concrete or timber floors. Within the length of the bracing element, bottom plates are fixed in accordance with the requirements of NZS 3604.

Lining

One layer of 7 mm Ecoply plywood or Ecoply® Barrier fixed directly to framing or over cavity battens. If part sheets are used, ensure nailing at required centres is carried out around the perimeter of each sheet or part sheet. A 2-3 mm expansion gap should be left between sheets.

Fastening the Ecoply®

Fasteners

Fasten with 50 x 2.8 mm galvanised or stainless steel flat head nails for direct fix, or 60 x 2.8 mm over cavity battens. Place fasteners no less than 7 mm from sheet edges.

Fasteners for H3.2 CCA treated Ecoply

Where fasteners are in contact with H3.2 CCA treated timber or plywood, fasteners shall be a minimum of hot dip galvanised.

In certain circumstances stainless steel fasteners may be required. Refer to table 8 of the Ecoply Specification and Installation Guide for these circumstances and further fastener selection advice.

Where stainless steel nails are required, annular grooved nails must be used.

Fastening centres

Fasteners are placed at 150 mm centres around the perimeter of each sheet and 300 mm centres to intermediate studs. Where more than one sheet forms the brace element each sheet must be nailed off independently.

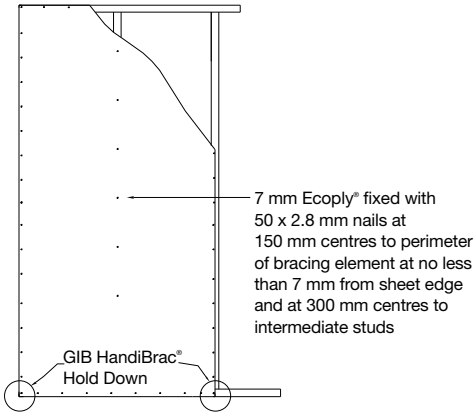

Ecoply® Bracing Systems are designed to meet the requirements of the New Zealand Building Code and have been tested and analysed using the P21 method referenced in NZS 3604:2011 listed as an acceptable solution B1/AS1 Structure. Testing was carried out using Ecoply and Laserframe SG8 timber framing manufactured by Carter Holt Harvey Limited trading as CHH Woodproducts New Zealand, and GIB® products manufactured by Winstone Wallboards Ltd. Substituting materials may compromise performance of the system. GIB® and GIB HandiBrac® are registered trade marks of Fletcher Building Holdings Ltd.

Consent Issued BC170037

BC170037

3.4 ECOPLY® BRACING SPECIFICATION – EP2

DOUBLE SIDED STRUCTURAL PLYWOOD BRACE

Specification No.	Minimum Wall Length	Lining Requirements	BUs/m Wind	BUs/m Earthquake
EP2	0.6 m	7 mm Ecoply® or Ecoply Barrier each side	140	150

Framing

Wall framing must comply with:

- NZBC B1 - Structure: AS1 Clause 3 Timber (NZS 3604:2011)
- NZBC B2 - Durability: AS1 Clause 3.2 Timber (NZS 3602)

Framing dimensions and height are as determined by the NZS 3604 stud and top plate tables for load bearing and non load bearing walls. Kiln dried verified structural grade timber must be used. Machine stress graded timber, such as Laserframe®, is recommended.

Bottom plate fixing

Use GIB Handibrac® hold-down connections at each end of the bracing element. Refer to manufacturer installation instructions supplied with the connectors for correct installation instructions and bolt types to be used for either concrete or timber floors. Within the length of the bracing element, bottom plates are fixed in accordance with the requirements of NZS 3604.

Lining

Each Side: One layer of 7 mm Ecoply plywood or Ecoply® Barrier fixed directly to framing or over cavity battens. If part sheets are used, ensure nailing at required centres is carried out around the perimeter of each sheet or part sheet. A 2-3 mm expansion gap should be left between sheets.

Fastening the Ecoply®

Fasteners

Fasten with 50 x 2.8 mm galvanised or stainless steel flat head nails for direct fix, or 60 x 2.8 mm over cavity battens. Place fasteners no less than 7 mm from sheet edges.

Fasteners for H3.2 CCA treated Ecoply

Where fasteners are in contact with H3.2 CCA treated timber or plywood, fasteners shall be a minimum of hot dip galvanised.

In certain circumstances stainless steel fasteners may be required. Refer to table 8 of the Ecoply Specification and Installation Guide for these circumstances and further fastener selection advice.

Where stainless steel nails are required, annular grooved nails must be used.

Fastening centres

Fasteners are placed at 150 mm centres around the perimeter of each sheet and 300 mm centres to intermediate studs. Where more than one sheet forms the brace element each sheet must be nailed off independently.

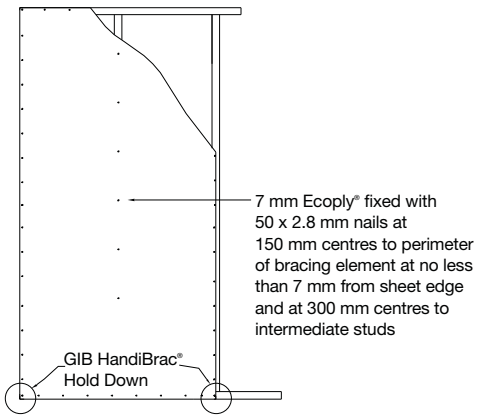

Ecoply® Bracing Systems are designed to meet the requirements of the New Zealand Building Code and have been tested and analysed using the P21 method referenced in NZS 3604:2011 listed as an acceptable solution B1/AS1 Structure. Testing was carried out using Ecoply and Laserframe SG8 timber framing manufactured by Carter Holt Harvey Limited trading as CHH Woodproducts New Zealand, and GIB® products manufactured by Winstone Wallboards Ltd. Substituting materials may compromise performance of the system. GIB® and GIB HandiBrac® are registered trade marks of Fletcher Building Holdings Ltd.

Consent Issued BC170037

BC170037

3.5 ECOPLY® BRACING SPECIFICATION – EPG

STRUCTURAL PLYWOOD BRACE WITH PLASTERBOARD OTHER SIDE

Specification No.	Minimum Wall Length	Lining Requirements	BUs/m Wind	BUs/m Earthquake
EPG	0.4 m	7 mm Ecoply® or Ecoply Barrier one side and 10 mm GIB® Standard plasterboard other side	100	115
	1.2 m		150	150

Framing

Wall framing must comply with:

- NZBC B1 - Structure: AS1 Clause 3 Timber (NZS 3604:2011)
- NZBC B2 - Durability: AS1 Clause 3.2 Timber (NZS 3602)

Framing dimensions and height are as determined by the NZS 3604 stud and top plate tables for load bearing and non load bearing walls. Kiln dried verified structural grade timber must be used. Machine stress graded timber ,such as Laserframe®, is recommended.

Bottom plate fixing

Use GIB HandiBrac® hold-down connections at each end of the bracing element. Refer to manufacturer installation instructions supplied with the connectors for correct installation instructions and bolt types to be used for either concrete or timber floors. Within the length of the bracing element, bottom plates are fixed in accordance with the requirements of NZS 3604.

Lining

Side 1: One layer of 7 mm Ecoply plywood or Ecoply® Barrier exterior wall cladding fixed directly to framing or over cavity battens. If part sheets are used, ensure nailing at required centres is carried out around the perimeter of each sheet or part sheet. A 2-3 mm expansion gap should be left between sheets.

Side 2: One layer of 10 or 13 mm GIB® Standard plasterboard vertically or horizontally fixed. Sheet joints are touch fitted and fastener heads and joints stopped in accordance with the GIB® Site Guide.

Fastening the Ecoply®

Fasteners

Fasten with 50 x 2.8 mm galvanised or stainless steel flat head nails for direct fix, or 60 x 2.8 mm over cavity battens. Place fasteners no less than 7 mm from sheet edges.

Fasteners for H3.2 CCA treated Ecoply

Where fasteners are in contact with H3.2 CCA treated timber or plywood, fasteners shall be a minimum of hot dip galvanised.

In certain circumstances stainless steel fasteners may be required. Refer to table 8 of the Ecoply Specification and Installation Guide for these circumstances and further fastener selection advice.

Where stainless steel nails are required, annular grooved nails must be used.

Fastening centres

Fasteners are placed at 150 mm centres around the perimeter of each sheet and 300 mm centres to intermediate studs. Where more than one sheet forms the brace element each sheet must be nailed off independently.

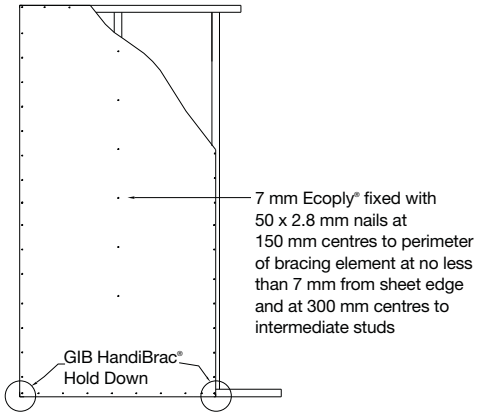

WAIMAKARIRI DISTRICT COUNCIL
Plans and specifications APPROVED in accordance with the Building Act 2004, clause 49 and the Building Regulations 1992, Clause 3
170037 13/03/2017 petert

Ecoply® Bracing Systems are designed to meet the requirements of the New Zealand Building Code and have been tested and analysed using the P21 method referenced in NZS 3604:2011 listed as an acceptable solution B1/AS1 Structure. Testing was carried out using Ecoply and Laserframe SG8 timber framing manufactured by Carter Holt Harvey Limited trading as CHH Woodproducts New Zealand, and GIB® products manufactured by Winstone Wallboards Ltd. Substituting materials may compromise performance of the system. GIB® and GIB HandiBrac® are registered trade marks of Fletcher Building Holdings Ltd.

Consent Issued BC170037

BC170037

Fastening the GIB® Plasterboard

Fasteners

32 mm x 6 g GIB® Grabber® Screws or 35 mm GIB® Nails

Fastening centres

Fasten 50, 100, 150, 225 and 300 mm from each corner and 150 mm thereafter around the perimeter of the bracing element. For vertical fixing place fasteners at 300 mm centres at intermediate sheet joints. For horizontal fixing place single fasteners in the tapered edge where sheets cross studs.

Place fasteners 12 mm from paper bound edges and 18 mm from cut sheet edges. GIB® plasterboard must be treated in every respect in accordance with relevant GIB® literature.

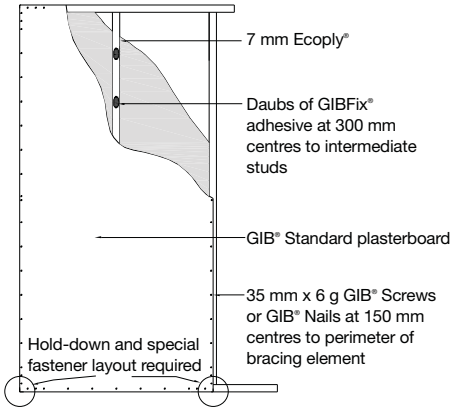

WAIMAKARIRI DISTRICT COUNCIL
Plans and specifications APPROVED in accordance with the Building Act 2004, clause 49 and the Building Regulations 1992, Clause 3
170037 13/03/2017 petert

Ecoply® Bracing Systems are designed to meet the requirements of the New Zealand Building Code and have been tested and analysed using the P21 method referenced in NZS 3604:2011 listed as an acceptable solution B1/AS1 Structure. Testing was carried out using Ecoply and Laserframe SG8 timber framing manufactured by Carter Holt Harvey Limited trading as CHH Woodproducts New Zealand, and GIB® products manufactured by Winstone Wallboards Ltd. Substituting materials may compromise performance of the system. GIB® and GIB HandiBrac® are registered trade marks of Fletcher Building Holdings Ltd.

Consent Issued BC170037

BC170037

3.6 ECOPLY® BRACING SPECIFICATION – EPGS

A BRACING ELEMENT SPECIALLY DESIGNED FOR SHEETS TO TERMINATE AT SOFFIT HEIGHT

Specification No.	Minimum Wall Length	Lining Requirements	BUs/m Wind	BUs/m Earthquake
EPGs	0.4 m	7 mm Ecoply® or Ecoply Barrier one side and 10 mm GIB® Standard plasterboard other side	100	115
	1.2 m		150	120

Framing

Wall framing must comply with:

- NZBC B1 - Structure: AS1 Clause 3 Timber (NZS 3604:2011)
- NZBC B2 - Durability: AS1 Clause 3.2 Timber (NZS 3602)

Framing dimensions and height are as determined by the NZS 3604 stud and top plate tables for load bearing and non load bearing walls. Kiln dried verified structural grade timber must be used. Machine stress graded timber, such as Laserframe®, is recommended.

Bottom plate fixing

Use GIB HandiBrac® hold-down connections at each end of the bracing element. Refer to manufacturer installation instructions supplied with the connectors for correct installation instructions and bolt types to be used for either concrete or timber floors. Within the length of the bracing element, bottom plates are fixed in accordance with the requirements of NZS 3604.

Lining

Side 1: One layer of 7 mm Ecoply plywood or Ecoply® Barrier fixed directly to framing or over cavity battens. If part sheets are used, ensure nailing at required centres is carried out around the perimeter of each sheet or part sheet. A 2-3 mm expansion gap should be left between sheets. The Ecoply may terminate within a maximum of 300 mm below the top of the top plate, e.g. at soffit line, where solid nogging must be provided for the full length of the bracing element to provide for fixing of the Ecoply.

Side 2: One layer of 10 or 13 mm GIB® Standard plasterboard vertically or horizontally fixed. Sheet joints are touch fitted and fastener heads and joints stopped in accordance with the GIB® Site Guide.

Fastening the Ecoply®

Fasteners

Fasten with 50 x 2.8 mm galvanised or stainless steel flat head nails for direct fix, or 60 x 2.8 mm over cavity battens. Place fasteners no less than 7 mm from sheet edges.

Fasteners for H3.2 CCA treated Ecoply

Where fasteners are in contact with H3.2 CCA treated timber or plywood, fasteners shall be a minimum of hot dip galvanised.

In certain circumstances stainless steel fasteners may be required. Refer to table 8 of the Ecoply Specification and Installation Guide for these circumstances and further fastener selection advice.

Where stainless steel nails are required, annular grooved nails must be used.

Fastening centres

Fasteners are placed at 150 mm centres around the perimeter of each sheet and 300 mm centres to intermediate studs. Where more than one sheet forms the brace element each sheet must be nailed off independently.

Fastening to cavity battens

The plywood side of the brace element may be fixed over cavity battens.

The cavity battens must be a minimum of 40 x 2.0 mm nailed in staggered formation at 150 mm centres to studs around the perimeter of the brace element, and nailed to the intermediate studs within the element at 300 mm centres. A minimum of 50 mm x 2.8 mm flat head galvanised or annular grooved stainless steel nails must be used.

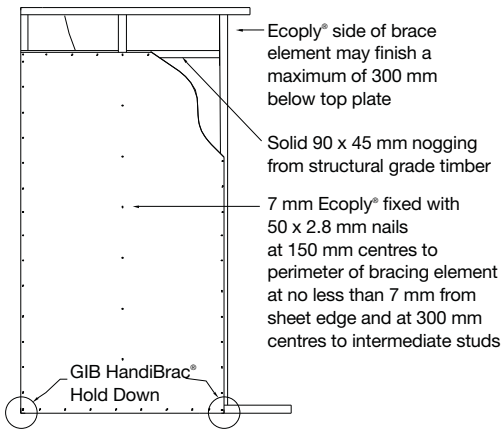

WAIMAKARIRI DISTRICT COUNCIL
Plans and specifications APPROVED in accordance with the Building Act 2004, clause 49 and the Building Regulations 1992, Clause 3
170037 13/03/2017 petert

Ecoply® Bracing Systems are designed to meet the requirements of the New Zealand Building Code and have been tested and analysed using the P21 method referenced in NZS 3604:2011 listed as an acceptable solution B1/AS1 Structure. Testing was carried out using Ecoply and Laserframe SG8 timber framing manufactured by Carter Holt Harvey Limited trading as CHH Woodproducts New Zealand, and GIB® products manufactured by Winstone Wallboards Ltd. Substituting materials may compromise performance of the system. GIB® and GIB HandiBrac® are registered trade marks of Fletcher Building Holdings Ltd.

Consent Issued BC170037

BC170037

Fastening the GIB® Plasterboard

Fasteners

32 mm x 6 g GIB® Grabber® Screws or 35 mm GIB® Nails

Fastening centres

Fasten 50, 100, 150, 225 and 300 mm from each corner and 150 mm thereafter around the perimeter of the bracing element. For vertical fixing place fasteners at 300 mm centres at intermediate sheet joints. For horizontal fixing place single fasteners in the tapered edge where sheets cross studs.

Place fasteners 12 mm from paper bound edges and 18 mm from cut sheet edges. GIB® plasterboard must be treated in every respect in accordance with relevant GIB® literature.

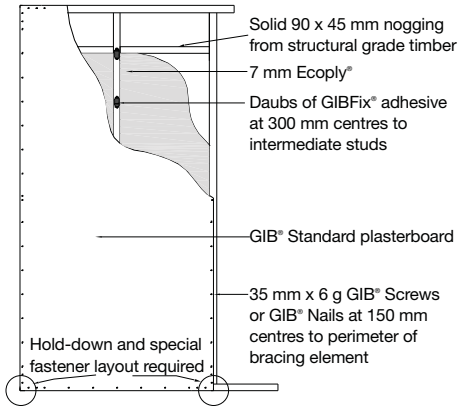

WAIMAKARIRI DISTRICT COUNCIL
Plans and specifications APPROVED in accordance with the Building Act 2004, clause 49 and the Building Regulations 1992, Clause 3
170037 13/03/2017 petert

Ecoply® Bracing Systems are designed to meet the requirements of the New Zealand Building Code and have been tested and analysed using the P21 method referenced in NZS 3604:2011 listed as an acceptable solution B1/AS1 Structure. Testing was carried out using Ecoply and Laserframe SG8 timber framing manufactured by Carter Holt Harvey Limited trading as CHH Woodproducts New Zealand, and GIB® products manufactured by Winstone Wallboards Ltd. Substituting materials may compromise performance of the system. GIB® and GIB HandiBrac® are registered trade marks of Fletcher Building Holdings Ltd.

Consent Issued BC170037

BC170037

3.7 GIB HANDIBRAC® - RECOMMENDED INSTALLATION METHOD

Developed in conjunction with MiTek™ NZ, the GIB HandiBrac® has been tested for use as a hold-down in all EP bracing elements.

- The GIB HandiBrac® registered design provides for quick and easy installation
- The GIB HandiBrac® provides a flush surface for the wall linings because it is fitted inside the framing. There is no need to check in the framing as recommended with conventional straps
- The GIB HandiBrac® is suitable for both new and retrofit construction
- The design also allows for installation and inspection at any stage prior to fitting internal linings

Concrete Floor		Timber Floor	
External walls	Internal walls	External walls	Internal walls
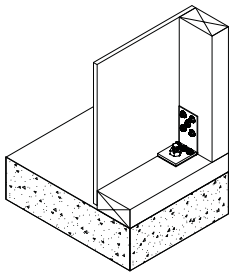	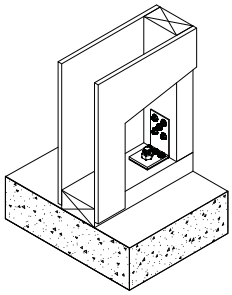	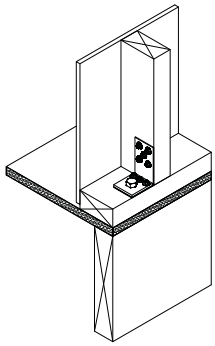	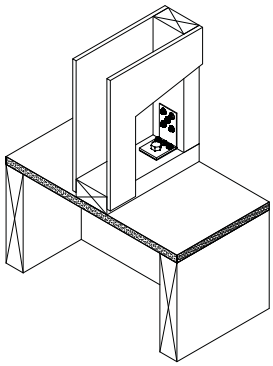
Position GIB HandiBrac® as close as practicable to the internal edge of the bottom plate	Position GIB HandiBrac® at the stud/ plate junction	Position GIB HandiBrac® in the centre of the perimeter joist or bearer	Position GIB HandiBrac® in the centre of the floor joist or full depth solid block
Hold-down fastener requirements			
A mechanical fastening with a minimum characteristic uplift capacity of 15kN or screw bolt supplied with the bracket		12 x 150 mm galvanised coach screw or screw bolt supplied with the bracket	

Reproduced with the permission of Winstone Wallboards Ltd

3.8 STRUCTURAL CEILING DIAPHRAGMS

Diaphragms are used to transfer lateral loads to braced walls and allow for greater spacing between bracing lines. Diaphragms do not have a BU rating themselves.

Plywood diaphragms are an acceptable solution as described in section 13 NZS 3604 13.5.2 and allows for plywood not less than 6 mm thick and a minimum of three ply for:

(a) Diaphragms not steeper than 25 degrees to the horizontal and not exceeding 10 metres long under light or heavy roofs and;
(b) Diaphragms not steeper than 45 degrees to the horizontal and not exceeding 7.5 metres long under light or heavy roofs

Ceiling Diaphragms are constructed as follows:

(a) The length of diaphragm shall not exceed twice its width measured between supporting walls
(b) The ceiling lining must consist of plywood over the entire area of the diaphragm
(c) Complete sheets with a minimum size of 1800 x 900 must be used
(d) Framing size and spacing must comply with NZS 3604
(e) Fastener size should comply with Table 7 of this publication. E.g. 40 mm x 2.5 mm flat head nails for 7 mm and 9 mm Ecoply
(f) Fastening is at 150 mm centres around the perimeter of each sheet and at 300 mm centres to intermediate framing
(g) Fixings are no closer than 10 mm from sheet edges
(h) Perimeter ceiling framing must be connected to wall framing by a perimeter 140 mm x 35 mm ribbon plate nailed to the top of the top plate or alternative such as a 0.55 mm thick steel angle or proprietary steel channel

WAIMAKARIRI DISTRICT COUNCIL
Plans and specifications APPROVED in accordance with the Building Act 2004, clause 49 and the Building Regulations 1992, Clause 3
170037 13/03/2017 petert

SECTION 4

H1 Calculations

Risk Matrix

Refer to sheet 5

Consent Issued BC170037

Building Consent Compliance Matrix

Client	G. Baldock	Designed to:	
Address	Elm Green	NZBC H1/AS1	WAIMAKARIRI DISTRICT COUNCIL
Lot & DP	40	NZS 4214. Method of Determining the Total Thermal	Plans and specifications APPROVED in accordance
Area	Rangiora	Resistance of Parts of Buildings	with the Building Act 2004, clause 49 and the Building
Job #	153232	NZS 4218. Energy Efficiency - Small Building Envelope	Regulations 1992, Clause 3
Designer	JKH	BRANZ House Insulation Guide	170037 13/03/2017 petert
Climate Zone	Zone 3	http://www.design-navigator.co.nz/CRC.php	

H1 Schedule:	All Walls				West, South & East walls only					North walls only (Recommend 50% max-Best Practice)				
Wall Insulation		R	2.6	Pink Batts	*Wall - 90x45 @ 600crs*			*R*	*2.60*					
Ceiling Insulation		R	3.6	Pink Batts	*Ceiling - trusses @ 900 crs*			*R*	*3.60*					
Glazing Vertical			Double	Standard	*Glazing - Standard Double glaze*			*R*	*0.26*					
Skylights (1.5m max)			0.00	m²	*Skylight*			*R*	*0.63*					
Floor	Total Envelope m²		128.00	100mm conc	*Floor - Standard 100mm Conc + DPM*			*R*	*1.30*					
Heated Floor		m²	0.00	100mm conc	*Heated Floor*			*R*	*1.30*					
Downlights	Closed & Abutted type				*Closed & Abutted type*									
Ground Level	Height	Length				Height	Length				Height	Length		
Total wall length	2.42	56.50	136.73	m²	Total wall length	2.42	40.20	97.28	m²	Total wall length	2.42	16.30	39.45	m²
First Floor														
Total wall length	0.00	0.00	0.00	m²	Total wall length	0.00	0.00	0.00	m²	Total wall length	0.00	0.00	0.00	m²
Total wall length	0.00	0.00	0.00	m²	Total wall length	0.00	0.00	0.00	m²	Total wall length	0.00	0.00	0.00	m²
Total Exterior Wall area			136.73	m²	Total Exterior Wall area			97.28	m²	Total Exterior Wall area			39.45	m²
Total opening area			55.73	m²	Total opening area			23.44	m²	Total opening area			17.50	m²
H1 value			***40.76%***	***OK<30%***	***H1 value***			***24.09%***	***OK<30%***	***H1 value***			***44.35%***	

Consent Issued BC170037

Building Consent Compliance Matrix

Client	G. Baldock
Address	Elm Green
Lot & DP	40
Area	Rangiora
Job #	153232
Designer	JKH

H1 Reference Building		Plan (R)	Area	Rererence	Heat Loss	H1 Proposed Building		Plan	Area	Actual	Heat Loss
Roof	Pink Batts	3.6	128.00	3.30	38.79	Roof	Pink Batts	3.6	128.00	3.60	35.56
Wall	Pink Batts	2.6	136.73	2.00	68.37	Wall	Pink Batts	2.6	136.73	2.60	52.59
Floor	100mm conc	1.30	128.00	1.30	98.46	Floor	100mm conc	1.3	128.00	1.30	98.46
	Heated Floor	1.90	0.00	1.90	0.00		Heated Floor	1.90	0.00	1.30	0.00
Glazing < 30%	Aluminium / Double	0.26	41.02	0.26	157.77	Glazing All	Aluminium / Double	0.26	55.73	0.26	214.35
Glazing > 30%	Aluminium / Double	0.34	14.71	0.34	43.27						0.00
Skylights	Area	0	0.00	0.34	0.00	Skylights	Area	0.00	0.00	0.63	0.00
				Total Loss	406.65					Total Loss	400.96

	Height	Length		
Total wall length	2.42	56.5	136.73	m²
Total wall length	0.00	0	0.00	m²
Total wall length	0.00	0	0.00	m²
	Total Exterior Wall area		136.73	m²
	Total Glazing area		55.73	m²
	Glazing <30%		41.02	m²
	Glazing >30%		14.71	m²

WAIMAKARIRI DISTRICT COUNCIL
Plans and specifications APPROVED in accordance with the Building Act 2004, clause 49 and the Building Regulations 1992, Clause 3
170037 13/03/2017 petert

	Reference	Proposed	Difference
Roof	38.79	35.56	3.23
Wall	68.37	52.59	15.78
Floor	98.46	98.46	0.00
Glazing < 30%	157.77	214.35	-56.59
Glazing > 30%	43.27	0.00	43.27
Skylights	0.00	0.00	0.00
Total Heat Loss	406.65	400.96	**5.69**

A positive figure is a **PASS**

BC170037

Building Consent Compliance Matrix

Consent Issued BC170037

WAIMAKARIRI DISTRICT COUNCIL
Plans and specifications APPROVED in accordance with the Building Act 2004, clause 49 and the Building Regulations 1992, Clause 3
170037 13/03/2017 petert

Start from front the front door - Clockwise														
Wall Openings - ALL			m²		**Wall Openings - W,S,E**			m²		**Wall Openings - North**			m²	
Ground Level					***Ground Level***					***Ground Level***				
1	2.14	1.50	3.21	Front Door	1	2.14	1.50	3.21		1				
2	1.80	0.90	1.62	North Wall	2					2	1.80	0.90	1.62	North Wall
3	1.80	0.90	1.62		3	1.80	0.90	1.62		3				
4	1.80	0.90	1.62		4	1.80	0.90	1.62		4				
5	2.14	4.50	9.63	Garage	5					5				
6	1.80	0.90	1.62	Garage	6					6				
7	1.80	0.90	1.62	Garage	7					7				
8	2.14	0.90	1.93	Garage	8					8				
9	1.80	1.50	2.70		9	1.80	1.50	2.70		9				
10	1.10	1.10	1.21		10	1.10	1.10	1.21		10				
11	1.80	1.50	2.70		11	1.80	1.50	2.70		11				
12	1.80	0.90	1.62		12	1.80	0.90	1.62		12				
13	0.50	1.80	0.90		13	0.50	1.80	0.90		13				
14	2.14	2.40	5.14	North Wall	14					14	2.14	2.40	5.14	North Wall
15	2.14	3.00	6.42		15	2.14	3.00	6.42		15				
16	2.14	3.00	6.42	North Wall	16					16	2.14	3.00	6.42	North Wall
17	1.80	0.80	1.44		17	1.80	0.80	1.44		17				
18	1.80	1.50	2.70	North Wall	18					18	1.80	1.50	2.70	North Wall
19	1.80	0.90	1.62	North Wall	19					19	1.80	0.90	1.62	North Wall
20			0.00		20	0.00	0.00	0.00		20				
21			0.00		21	0.00	0.00	0.00		21				
22			0.00		22	0.00	0.00	0.00		22				
23			0.00		23	0.00	0.00	0.00		23				
24			0.00		24	0.00	0.00	0.00		24				
25			0.00		25	0.00	0.00	0.00		25				
26			0.00		26	0.00	0.00	0.00		26				
27			0.00		27	0.00	0.00	0.00		27				
28			0.00		28	0.00	0.00	0.00		28				
29			0.00		29	0.00	0.00	0.00		29				
30			0.00		30	0.00	0.00	0.00		30				
31			0.00		31	0.00	0.00	0.00		31				
32			0.00		32	0.00	0.00	0.00		32				
		Sub Total	***55.73***				***Sub Total***	***23.44***				***Sub Total***	***17.50***	

Building Consent Compliance Matrix

Consent Issued BC170037

WAIMAKARIRI DISTRICT COUNCIL
Plans and specifications APPROVED in accordance with the Building Act 2004, clause 49 and the Building Regulations 1992, Clause 3
170037 13/03/2017 petert

Start from front the front door - Clockwise														
Wall Openings - ALL			m²		**Wall Openings - W,S,E**			m²		**Wall Openings - North**			m²	
First Floor					***First Floor***					***First Floor***				
1			0.00		1	0.00	0.00	0.00		1				
2			0.00		2	0.00	0.00	0.00		2				
3			0.00		3	0.00	0.00	0.00		3				
4			0.00		4	0.00	0.00	0.00		4				
5			0.00		5	0.00	0.00	0.00		5				
6			0.00		6	0.00	0.00	0.00		6				
7			0.00		7	0.00	0.00	0.00		7				
8			0.00		8	0.00	0.00	0.00		8				
9			0.00		9	0.00	0.00	0.00		9				
10			0.00		10	0.00	0.00	0.00		10				
11			0.00		11	0.00	0.00	0.00		11				
12			0.00		12	0.00	0.00	0.00		12				
13			0.00		13	0.00	0.00	0.00		13				
14			0.00		14	0.00	0.00	0.00		14				
15			0.00		15	0.00	0.00	0.00		15				
16			0.00		16	0.00	0.00	0.00		16				
17			0.00		17	0.00	0.00	0.00		17				
18			0.00		18	0.00	0.00	0.00		18				
19			0.00		19	0.00	0.00	0.00		19				
20			0.00		20	0.00	0.00	0.00		20				
21			0.00		21	0.00	0.00	0.00		21				
22			0.00		22	0.00	0.00	0.00		22				
Total Wall Openings			***55.73***	***m²***	***Total Wall Openings***			***23.44***	***m²***	***Total Wall Openings***			***17.50***	***m²***

Consent Issued BC170037

SECTION 5

Specifications

Consent Issued BC170037

Building Consent 170037
Received 20/2/17

SPECIFICATION

of work to be done and materials to be used in carrying out the works shown on the accompanying drawings

WAIMAKARIRI DISTRICT COUNCIL
Plans and specifications APPROVED in accordance with the Building Act 2004, clause 49 and the Building Regulations 1992, Clause 3
170037 13/03/2017 petert

G. Baldock

Lot 40
Elm Green
Rangiora

Job number: 153232

Date: 15 February 2017

Consent Issued BC170037

CONSTRUCTION SCHEDULE

Building Consent 170037
Received 20/2/17

Construction Schedule to be read in conjunction with the "Factory Order". The Factory order is to take precedence over construction schedule. Any Alterations to the Construction Schedule / Consented documentation shall be forwarded to the local Council for approval.

SINGLE STOREY

For the following site/project information refer to the lower section of the title block on the plans:
- Snow zone, Earthquake zone, Corrosion zone, Roof type, Wall types & Wind Zone (Refer to bracing calculation sheet "building location" section for wind zone analysis). Wind zone has been provided from the "Wind Zones & Contours" plan number 3271 available from the Waimakariri District Council website http://www.waimakariri.govt.nz/Libraries/Maps_and_Plans/Wind_Zones_and_Contours.sflb.ashx

These drawings to be read in conjunction with any supplementary engineer's documentation (i.e. Truss design, floor framing layout)
All construction to comply with NZS 3604, NZBC & local council policy.
All timber treatment to comply with NZS 3602

WAIMAKARIRI DISTRICT COUNCIL
Plans and specifications APPROVED in accordance with the Building Act 2004, clause 49 and the Building Regulations 1992, Clause 3
170037 13/03/2017 petert

FOUNDATION:
Foundation Design as per specific Design

Plaster finished foundation face

SG8
Exterior walls: H1.2, Bottom plate - 90x45 & Double top plate - 90x45 + 140x35
Interior walls: H1.2, Bottom plate & Top Plate - 90x45, refer to ceilings for double top plate requirements
Bottom plate fixings: Lumberlok Bottom Plate Fixing Anchors as per manufacturer's specifications @ 900mm crs on all external walls and within 150mm of each end of the plate. 75mmx4mmØ shot fired fasteners @ 600mm crs and within 150mm of each end of the bottom plate to interior load bearing walls.
DPC between bottom plate & floor slab (Refer to MiTek specification attached for specific bottom plate fixing details required for bracing & lintels).

WALL FRAMING:
Ground Floor
Exterior & Interior Loadbearing wall: 90x45mm studs @ 600 crs
Dwangs Ext: 90x45 @ 800crs
Non loadbearing: 90x45mm studs @ 600 crs
Dwangs Int: 90x45mm @ 1350mm crs

Lintels: Lintels are shown on the Truss design. (All Lintels SG8 unless stated otherwise).

Building Wrap: Waterhate Plus building wrap with Aluband flexible flashing tape
Air Barrier to unlined wall and gables: Watergate Plus building wrap
Building wrap to be strapped @ 300crs between dwangs.

INSULATION, ENERGY EFFICIENCY:
Refer to H1 Schedule, Energy Efficiency Calculations
Exterior Walls: Pink Batts – R 2.4 Wall
Ceilings: Pink Batts – R 3.6 Ceiling
Glazing: Double glazing to all windows, excluding garage
Air Seals: PEF Rod & Low expansion foam.
Lighting: All lighting recessed into ceilings to be closed and abutted type.

TRUSSED ROOF AREA: (An as built truss design will be provided at time of manufacturing)
Metal Tile - Battens: 50x40 SG6 H1.2 @ 370crs (Fixings in specification)
Trusses: @ 900crs, refer to truss design (H1.2 unless otherwise stated)
Fascia & Gutter system:
Refer to manufacturers specification attached, provide Snow straps
Down pipes: 75x55 Rectangle Colorsteel
Soffits: 4.5mm Hardiflex to Ribbon boards, sprockets & packers ex50
(Timber treatment as per Timber Treatment Plan) Delete if no Timber Treatment Plan

Consent Issued BC170037

Building Consent 170037
Received 20/2/17

CEILINGS:
Interior Walls: Walls running parallel to battens to be double top plate - 90x45 + 140x35
Battens: Rondo" metal ceiling battens @ 600 crs (#6 Gib Grabber Scavenger Head self tapping screws, no fixing clip).

Finish garage: 13mm Gib board, Level 3 plaster finish
Flat Ceilings: 13mm Gib board throughout unless specified different on the plans & Level 4 finish to all rooms in flat ceiling areas

FLOOR FINISHES
Note: Floor surfaces of any space containing "*sanitary fixtures or sanitary appliances must be impervious and easily cleaned*." (Seal floor when Laundry is in garage)
Carpet: Non-slip and have a slip (wet) coefficient value of 0.55-0.70 for tufted of loop pile. (NZBC D1/AS1 Table 2) Floors to be carpet unless stated otherwise on plan, not including the garage.

Entry through external doors to have a max step of 190mm (Riser height and tread depth for all steps in one flight, shall be uniform within the tolerance of ± 5 mm measured at the centreline on straight flights and at the pitch line on curved and spiral flights.)
With outward opening doors, a landing shall be provide with a clear space of at least 400mm from the leading of the door and the full width of the landing.
Build up this area with AP40 and compact, to have a cross fall of no less than 1:100 and fall away from building. (By Others, Coefficient of friction, wet - 0.6 - 0.9)

WET AREAS
Aqualine Gib with Enamel paint finish, refer to details attached.
Waterproofing: Flooring to all first floor wet areas, bath plinths to be sealed with "Wetseal" fibreglass waterproofing membrane BRANZ appraisal 372 (2000)

KITCHEN JOINERY
Bench top –Melamine (High Pressure laminate), Cupboards – Melteca/Melamine
Bathroom Joinery
Top – Vitreous China, Cupboards – Polyurethane coated
Minimum Requirements for sinks:
Kitchen Sink: 300mm dia min X 125mm min depth. (As per NZBC G3/AS1)
Laundry tub: No less than 35 litres. (As per NZBC G2/AS1)

VENTILATION:
Mechanical ventilation to be discharged outside via the soffit to comply with NZBC G4/AS1. (Manrose 120Ø FAN 0940, Manrose SF 150)

Smoke Alarms (Hush type) To comply with NZBC F7/AS1. Smoke detectors to be fitted within 3.0m of sleeping areas and on Escape routes, as indicated on plan. (Proof of compliance will be required for final inspection and issue of Code Compliance Certificate).

WATER PIPES
Water pipe from hot water heater to be 15mmØ with no more than 2 litres total volume (as per NZBC G12/AS1 Table 4 and NZS 4305 cl. 3.2.1 and Table 5) and closed cell foam polymer insulation which is preformed to the shape of the pipe and not less than 13 mm thick, is acceptable material for preventing pipes less than or equal to 40 mm diameter from freezing (as per NZBC G12/AS1)
Acceptable pipe lengths as per NZS 4305 table 5
10 mmØ = 78ml/m (25m max, total)
15mmØ = 176ml/m (12m max, total)
20mmØ = 214ml/m (7m max, total)
NZBC 7.5 Watertightness
7.5.1 The water supply system shall be tested to ensure watertightness.
An acceptable testing method is to:
a) Subject the hot and cold system to a pressure of 1500 kPa for a period of not less than 15 minutes, and
b) Inspect the system to ensure that there are no leaks.

RAINFALL CATCHMENT AREA CALCULATION
Rainfall Intensity: as per Appendix A, E1/AS1
Gutter Type & Downpipe Size: As noted above in "Truss Roof area" note in Construction Schedule.

Consent Issued BC170037

Cross Sectional Area: Refer to manufacturers specification attached
Roof Pitch: As noted in the project information on the plan.
Maximum Catchment Area: 0º-25º =60m² , as per NZBC E1/AS1 Table 5

Building Consent 170037
Received 20/2/17

Consent Issued BC170037

PRELIMINARIES AND GENERAL

Building Consent 170037
Received 20/2/17

THE PROJECT
The works are as described in this specification and as shown on the drawings.

SITE
The site of the works, the site address and the legal description are shown on the drawings. Confine access and work to the area of site indicated on the drawings.

BUILDING CONSENT COMPLIANCE
It is an offence under the Building Act 2004 to carry out any work not in accordance with the building consent. Refer the resolution of matters concerning compliance to the main contractor for direction. Where building consent approval is affected refer any change to the territorial authority.

STATUTORY OBLIGATIONS
Comply with all statutory obligations and regulations of regulatory bodies controlling the execution of the works.

BUILDING CONSENT
Obtain the original or copies of the building consent form and documents from the main contractor and keep on site. Liaise with the territorial authority for all notices to be given and all inspections required during construction to ensure compliance. Return the consent form and documents to the owner on completion.

PRODUCER STATEMENTS
When producer statements verifying construction are required, provide copies to both the territorial authority and the owner. Producer statements to be in the form required by the Territorial Authority to comply with the Building Act.

SET-OUT AND DATUM
Set out the works to conform with the drawings. Establish a permanent site datum to confirm the proposed building ground floor level and its relationship to all other existing and new building levels.

Consent Issued BC170037

PREPARATION AND GROUNDWORK

Building Consent 170037
Received 20/2/17

Documents referred to in this section are:

NZBC	B1 Structure
	B2 Durability
	E2 External Moisture
NZS 3604	Timber framed buildings

OSH: Approved code of practice for safety in excavation and shafts for foundations

GRANULAR FILL
Approved screened crushed gravel or scoria, graded in size from 20 mm to 7 mm, clean. When tested with a standard sieve of 4.75 opening no material is to pass.

SURFACE PREPARATION
Comply with NZS 3604 section 3.5. Remove all turf, vegetation, trees, topsoil, stumps and rubbish from the area to be built on.

STOCKPILE TOPSOIL
Stockpile excavated topsoil on site where directed. Keep separate from other excavated materials.

GENERAL EXCAVATION
Trim ground to required profiles, batters, falls and levels. Remove loose material. Protect cut faces from collapse. Keep excavations free from water.

FOUNDATION EXCAVATION
Take foundation excavations to depths shown on plans. Keep trenches plumb and straight, bottoms level and solid, stepped as detailed and clean and free of water.

INADEQUATE BEARING
If supplied, Engineers Ground Bearing and Foundation report takes precedence over the following:

When bearing is inadequate, excavate further and backfill as per below.
Confirm any changes with the territorial authority.

Below slabs on grade:	Hardfill
Below footings:	10 MPa concrete
Service trenches:	Hardfill

If excavation exceeds the required depths, backfill and compact to the correct level with material as listed.

GRANULAR BASE FOR SLABS
To conform with NZS 3604 (Details noted on the plans). Consolidate with a vibrating roller ready to receive a dampproof membrane.

GENERAL BACKFILLING
Obtain written confirmation from the owner & the main contractor before using any excavated material (An Engineer will need to be involved and Council Approval will be required. Compact approved backfilling in 150 mm layers with the last 200 mm in clean topsoil, lightly compacted and neatly finished off to a Maximum depth of 600mm.

Consent Issued BC170037

CONCRETE

Building Consent 170037
Received 20/2/17

Refer to Specific Foundation Design

FALSEWORK AND FORMWORK
Use falsework and formwork of sufficient strength to retain and support the wet concrete to the required profiles and tolerances. Select formwork finish to produce the specified finished quality. Ensure timber or plywood used for formwork is non-staining to the set concrete.
Securely fix and brace formwork sufficiently to support loads and with joints and linings tight enough to prevent water loss.

DAMPPROOF MEMBRANE
0.25 mm minimum polyethylene to NZS 3604 clause 7.5.4 Damp-proof membrane.
Apply polythene membrane to prepared base course with 150 mm laps between sheets. Tape seal laps and penetrations with 50 mm wide pressure sensitive plastic tape.

REINFORCEMENT
As Per Engineers Design

Cut and bend bars using proper bending tools to avoid notching and to the requirements of NZS 3109 clause 3.3 Hooks and bends. Do not rebend bars without written approval.

Secure reinforcement adequately with tying wire and place, support and secure against displacement when concreting. Bend tying wire back well clear of the formwork. Spacing as dimensioned, or if not shown, to the clear distance minimums laid down in NZS 3109 clause 3.6 Spacing of reinforcement.

Minimum cover to all reinforcing bars, stirrups, ties and spirals, as shown on the drawings. Where cover is not shown on drawings provide minimum cover to NZS 3101 table 5.5 minimum required cover. Fix chairs for top reinforcement in slabs at 1.0 metre centres or to ensure adequate support. Cover tolerances to NZS 3109 clause 3.9 Tolerances for reinforcement.

Length of laps where not dimensioned on the drawings in accordance with the Manufacturers Specification. Increase laps of plain round steel by 100%. Tie all lapping bars to each other.

REINFORCEMENT LAPS

Bar Diameter	Lap
10 mm	400 mm
12 mm	500 mm
16 mm	650 mm

TYING WIRE - Mild drawn steel wire not less than 1.2 mm diameter.

SPACERS AND CHAIRS - Precast concrete or purpose made moulded PVC to approval. Use concrete spacer blocks only where the concrete surface is not exposed in the finished work.

PRE-PLACEMENT INSPECTION
Do not place concrete until all excavations, boxing and reinforcing have been inspected and passed by the territorial authority inspector.

.

PRESCRIBED MIX CONCRETE
As Per Engineers Design

Formwork linings and surface finishes as nominated for both fair face and concealed or exposed surfaces. Unless detailed, obtain written confirmation of the type and pattern of all joints.

Set up and supervise pump operation, placing and compaction of the mix to NZS 3109 clause 7.4 Handling and placing and 7.6 Compaction Advise the ready-mix supplier of the type of pump and the slump required, in addition to the concrete grade, strength and quantity.
Use power operated vibrators on foundations, vertical constructions and beams.

Building Consent 170037
Received 20/2/17

Consent Issued BC170037

Concrete slab-on-ground floors in timber buildings constructed to NZS 3604 clause 7.5 lay to true and straight surfaces, screeded, floated and steel (manual or power) trowelled finish. Tolerance on flatness: maximum 3 mm gradual deviation over a 3 metre straight-edge, to NZS 3109 clause 104 Surface tolerances.

CASTING IN

Build in all grounds, bolts and fixings for wall plates and bracing elements, holding down bolts, pipes, sleeves and fixings as required by all trades and as shown on the drawings, prior to pouring the concrete.

Do not use grounds exceeding 100 mm in length. Location and form of conduits to be approved in writing by the owner. Minimum cover 40 mm. Do not encase aluminium items in concrete. Do not paint steel embedded items more than 25 mm into the concrete encasement. Cut back form ties to specified cover and fill the cavities with mortar.

Form all pockets, chases and flashing grooves as required by all trades and as shown on the drawings.

Wrap all pipes embedded in concrete with tape to break the bond and to allow for expansion. Do not embed pipes for conveying liquids exceeding a temperature of 50°C in concrete.

Consent Issued BC170037

CARPENTRY

Building Consent 170037
Received 20/2/17

Documents referred to in this section are:

AS/NZS 1748	Mechanically stress-graded timber
AS/NZS 1859	Reconstituted wood based panels, 1859.1: Particleboard
AS/NZS 2269	Plywood - Structural
NZS 3602	Timber and wood-based products for use in building
NZS 3603	Timber structures standard
NZS 3604	Timber framed buildings
AS/NZS 1328 1&2	Glued laminated structural timber
NZS 3631	New Zealand national timber grading rules

Refer to Production Specification for Durability requirements.

TIMBER FRAMING, FOR INTERIOR USE
Timber treatment as per “All Framing” section, machine stress graded timber to AS/NZS 1748, with moisture content at supply of 18% or less.

TIMBER FRAMING, FOR EXTERIOR USE
Timber treatment as per “All Framing” section, machine stress graded timber to NZS 3631 and to NZS 3602, table 1 with moisture content to NZS 3602 table 4

CEILING BATTENS

GIB® Rondo™ Galvanised Steel Ceiling Battens

TIMBER TRUSSES
Moisture content at supply: 18%.

DAMPPROOF COURSE
2-ply/3-ply Kraft felt strip saturated and coated with bitumen.

NAILS
Steel, stainless steel and galvanised steel of pattern to suit the location.

Type to NZS 3604 section 4 Durability, and of the size and number for each particular types of joint as laid down in the nailing schedules of NZS 3604 sections, 6 Foundations, 7 Floors, 8 Walls, 9 Posts, 10 Roof framing and 15 1.5 kPa and 2 kPa snow loading. Except that when hand driving nails into Timber the nail lengths and diameters should be generally as for power driven nails.

BOLTS AND SCREWS
Steel, stainless steel and galvanised steel of pattern to suit the location.

NAIL PLATES
As per manufacturer’s design for the particular locations as shown on the drawings.

CONNECTORS
Galvanised steel connectors and structural brackets to the connector manufacturer's design for particular locations shown on drawings.

MOISTURE CONTENT
Maximum allowable equilibrium moisture content (EMC) for framing supporting interior linings 18%

FRAMING WALLS
Frame to required loading and bracing complete with lintels, sills and nogs, all fabricated and fastened to NZS 3604 sections 8 & 15.

FRAMING ROOFS
Frame to required loading and bracing complete with valley boards, ridge boards and purlins/battens. Design and fit roof trusses complete with anchorage. All fabricated and fastened to NZS 3604 sections, 9 Posts, 10 Roof framing and 15 1.5 kPa and 2 kPa snow loading.

Consent Issued BC170037

INSTALLING CEILING BATTENS

Fabricate and fasten to as per manufacturers recommendation.

Building Consent 170037
Received 20/2/17

Consent Issued BC170037

Building Consent 170037
Received 20/2/17

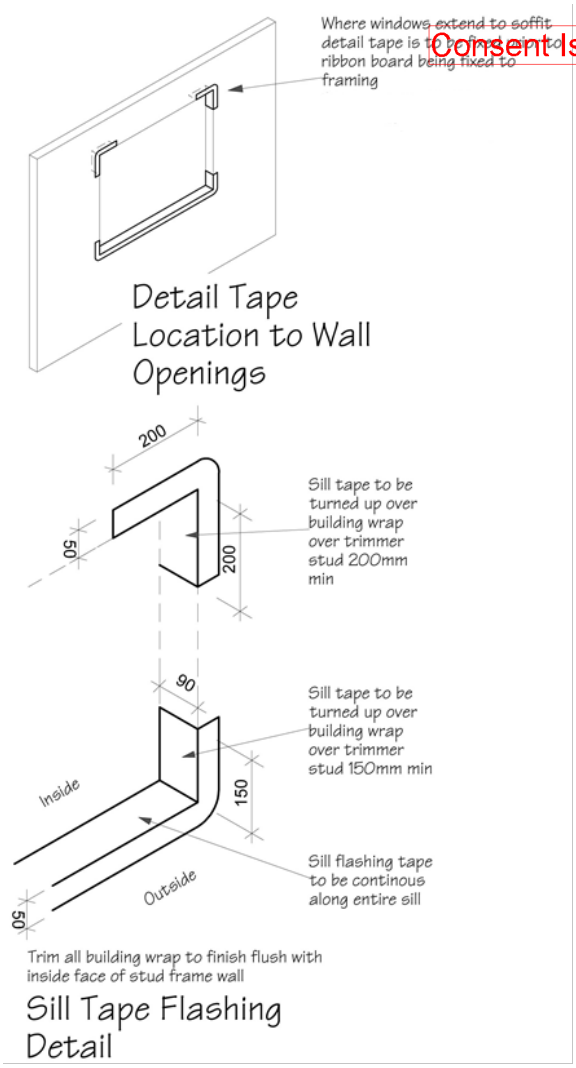

Figure 72B: **General window and door opening with drainage cavity**
Paragraphs 9.1.5, 9.1.9.3, 9.1.10.2, Figures 73C, 76, 85, 86, 91, 99, 116 and 128

NOTE:
(1) Detailed *cladding* omitted for clarity, refer to specific *claddings*.
(2) Head to be treated similarly with continuous *wall underlay* and *flexible tape* at corners.
(3) Refer individual cladding details for jamb flashings.

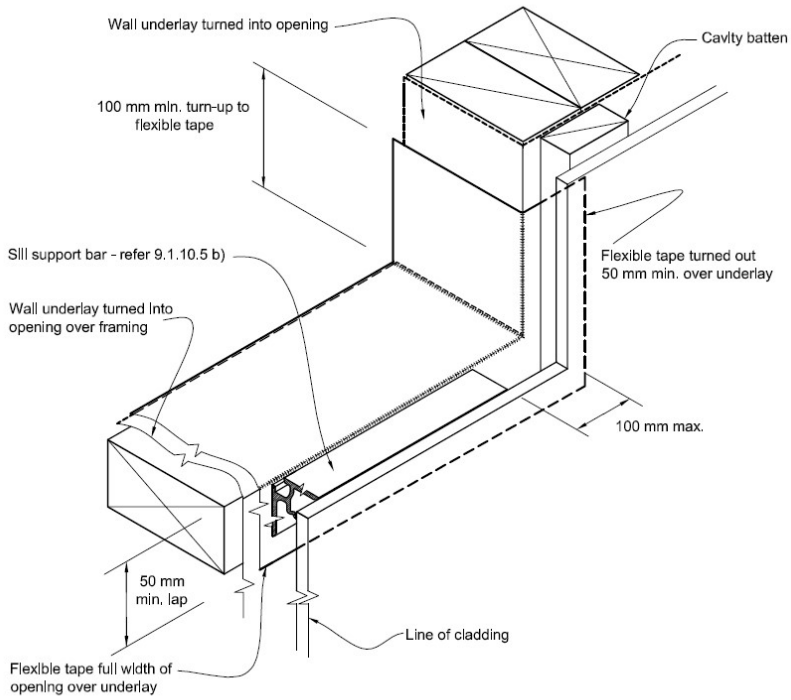

Consent Issued BC170037

BRICK VENEER CLADDING

Building Consent 170037
Received 20/2/17

Documents referred to in this section are:

NZBC B1/AS1	Structure general
AS/NZS 2699	Built in components for masonry construction
NZS 3103	Sands for mortars and plasters
NZS 3112	Specification for pigments for Portland cement and Portland cement products
NZBC E2/AS1	External Moisture
NZS 3604	Timber-framed Buildings
NZS 4210	Masonry construction: Materials and workmanship
NZS 4236	Masonry veneer wall cladding

BRICKS
To AS/NZS 4455. Size: 230 mm x 76 mm x 70 mm
Lay bricks to NZS 4210. Ensure bricks are dry when laid. Use bricks equally off all pallets as work proceeds. Distribute facing bricks of varying colour randomly throughout so no patches or striping appears.

Stretcher bond, single width unless detailed or stated otherwise.

Rake out joints as work proceeds. Joints tooled concave after initial mortar stiffening.

Cavity 40mm min. – 75mm max. Pipes and services not to be placed within the cavity.

Weep holes to E2/AS1 clause 9.2.6 Cavities. (Approximately 800 crs & to be a minimum of 1000mm² per meter)

DAMPPROOF MEMBRANE
Apply bituminous brush-on liquid applied membrane as a primer and 2 coats, to drain water effectively out of the cavity.

VENEER TIES
To NZS 4210
Wall ties shall be placed within 5º of a right angle to the plane of the masonry, fix to face of studs without otherwise piercing or damaging the building wrap. Ties placed and spaced to E2/AS1 table 18A. Corrosion protection for masonry wall ties as per E2/AS1 table 18C.

Table 18C: Corrosion protection to masonry wall ties
Paragraph 9.2.7

	316, 316L, or 304 stainless steel	470 g/m^2 galvanising on mild steel
Zone B	Yes	Yes
Zone C	Yes	Yes
Zones D and E	Yes	-

Consent Issued BC170037

Table 18B: Placement of wall ties
Paragraph 9.2.5 and 9.2.7

Location	Placement of masonry ties
Unsupported panel sides and edges of openings	Within 300 mm of panel side or edge.
Top of veneer panels and top of panels under openings	Within 300 mm or two courses (whichever is the smaller) of top of veneer
Bottom of veneer panel in masonry rebate sealed with liquid applied *damp-proof course* Bottom of veneer panel supported on steel angle lintel	Within 300 mm or two courses (whichever is the smaller) from bottom of veneer
Bottom of veneer panel in masonry rebate with *membrane damp-proof course*	In each of the first two courses

NOTES:
Ties are to be screw fixed (ie. non-impact method) using screws outlined in Table 24.

Table 18A: Specification of maximum tie spacings for type B (4) veneer ties
Paragraph 9.2.7

Seismic zone Refer NZS 3604	Masonry veneer Less than 180 kg/m²			Masonry veneer 180 – 220 kg/m²			Masonry veneer more than 220 kg/m²
	Tie type (4)(5)	Maximum spacings (1) Horizontal	Vertical	Tie type (4)(5)	Maximum spacings (1) Horizontal	Vertical	
1	EL	600	400	EM	600	400	SED (2)
2 (6)	EM	600	400	EH (3)	600	400	SED (2)
3	EH (3)	600	400	EH (3)	600	400	SED (2)
4	SED (2)	SED (2)	SED (2)				

NOTES
(1) Maximum masonry tie spacings of 600 mm horizontally and 400 mm vertically
(2) Spacing of ties to be determined by specific engineering design
(3) EM may be used if the horizontal spacings do not exceed 400 mm and the vertical spacings do not exceed 300 mm
(4) Type B and Prefix E indicate masonry ties manufactured to AS/NZS 2699.1
(5) L (Light), M (Medium), H (High) indicate strength capability of ties in AS/NZS 2699.1
(6) Use seismic zone 2 (minimum) for Christchurch region comprising Christchurch City, Waimakariri District and Selwyn District.

SAND FOR MORTAR
Sand to comply with NZS 3103. Chloride levels to not exceed 0.04% by dry weight of sand.

Composed of Portland cement, sand and water with an admixture to the provisions of NZS 4210 clause 2.2. Obtain written approval of admixture to be used. Also obtain written approval if intending to use cement mortar as a damp proof course and where, or if intending to use hydrated lime in the mortar.

To maximum practical density. Mortar fully laid, firmly placed, correctly cured and not re-tempered. Discard any mortar not used within 1½ hours of mixing.
Joint thickness: 10 mm ±1 mm.

Add mineral oxide pigment conforming to NZS 3117 and to requirements of NZS 4210 clause 2.2.2.2(f).

WATER
Clean, fresh and free from excess alkali, salt, silt and organic materials. Water from a local authority water supply is acceptable.

Consent Issued BC170037

Building Consent 170037
Received 20/2/17

STORAGE
Store bricks and other materials clear of the ground, under cover and well ventilated until placed in the work.

KEEP CAVITY AND TIES CLEAR
Keep cavity and ties clear of mortar droppings and clean the brickwork face of any marking as the work proceeds. Repair damage to building paper immediately it occurs.

Consent Issued BC170037

Building Consent 170037
Received 20/2/17

METAL TILE ROOFING

1. GENERAL

1.1 DOCUMENTS
Documents referred to in this section are:

NZBC	B1, B2 E1.
NZBC E2/AS1	External moisture
AS 1397	Steel sheet and strip - hot-dipped, zinc-coated, or aluminium/zinc-coated
NZS 3403	Specification for hot-dipped galvanised corrugated steel sheet for building purposes
NZS 3602	Timber and wood-base products for use in building
NZS 3604	Timber framed buildings
NZS 4217	Pressed metal tile roofs

1.2 QUALIFICATIONS
Carry out roofing work using experienced, competent roofers familiar with the materials and techniques specified.

1.3 WIND AND EARTHQUAKE LOADINGS
Use fixings and methods capable of sustaining the loads appropriate to the area as set out in NZS 3604, section 5.

1.4 CO-ORDINATE
Co-ordinate to ensure substrate and preparatory work is complete and other work programmed in the order required for access and completion of the roof.

1.5 PERFORMANCE
Accept responsibility for the weather-tight performance of the completed roofing system, including all penetrations through the roof and junctions with walls and parapets.

2. PRODUCTS

2.1 TILE BATTENS
Douglas fir, or No 1 framing radiata pine to NZS 3602, table 1E. Size to NZS 3604, section 10.

2.2 UNDERLAY
Heavy duty self supporting building paper

2.3 METAL ROOFING TILES
Pressed steel sheet galvanised to NZS 3403, aluminium/zinc coated to AS 1397. Finish as specified. Accessories, cappings, flashings, and fixings to match and to the roofing manufacturer's requirements.

2.5 NAILS, SCREWS AND FASTENINGS
Metal, size and pattern, to roofing manufacturer’s requirements and complying with the relevant aspects of NZS 3604, section 4: Durability.

3. EXECUTION

3.1 STORAGE
Stack roofing and accessories on clean, level areas of the site and protect from damage and from weather until ready to fix in place. Avoid overloading roof structure when roofing materials are placed on the roof area prior to installation.

Building Consent 170037
Received 20/2/17

Consent Issued BC170037

3.2 SET-OUT
Set out the planned layout before fixing commences, to ensure true lines and the correct relationship to module, grid and roof features.

3.3 LAY ROOF UNDERLAY
Lay and fix to NZBC E2/AS1: 8.1.5 Underlays, NZS 3604, section 11.2.2 and the roofing manufacturer's requirements.

3.4 LAY ROOFING, GENERALLY
Take care to avoid damaging pre-finished roofing both during and after fixing. Wear only soft-soled shoes on the finished surface.

3.5 INSTALL TILE BATTENS
Install the tile battens to the roofing manufacturer's requirements and with all joints fully supported and staggered.

3.6 CUT METAL TILES
Cut with tools specified by the roofing manufacturer. Fold ends and seal cut edges of tiles and accessories without damaging their integrity or finish, all to the roofing manufacturer's requirements.

3.7 LAP METAL TILES
Lap metal tiles and fix complete with matching accessories, flashed to roof features and penetrations; all to the roofing manufacturer's requirements and NZS 4217.

3.9 FIXINGS
Refer to the roofing manufacturer’s literature for fixing details and to NZS 3604 for fixings durability requirements.

3.10 INSTALL COVERS AND FLASHINGS
Install and fix as detailed and to the roofing manufacturer’s details and to comply with NZBC E2/AS1: 4.0 Flashings, 5.0 Roof/wall junctions and 6.0 Parapets.

3.11 PENETRATIONS
Flash and overflash all penetrations through the roof.

3.12 PENETRATIONS AND JUNCTIONS
Check that adjoining walls and parapets are prepared ready for the installation of the roofing. Confirm that openings have been prepared ready for the installation of skylights and other penetrations through the roof. Required work includes the following:
- underlay turned up at wall and parapet lines
- underlay finished and dressed off to all openings, ready for the installation of skylights and other penetrations
- roofing installation neatly finished to all sides of openings and to all wall and parapet junctions
- installation of flashings (those required to be installed prior to installation of penetrating elements and/or wall linings).

3.13 USE OF SEALANTS
Select and use sealants only as recommended by the roofing manufacturer.

3.14 COMPLETE
Ensure the work is complete with all flashings, undercloaks, valleys, ridges and hips properly installed so the finished roof is completely weathertight.

3.15 REMOVE FILINGS
Remove metal filings from roofing surfaces at least daily.

3.16 CLEAR
Clear trade rubbish and unused materials from the roof and surrounds regularly during the work and at completion. Sweep down the completed roof and flush out spoutings, gutters and rainwater pipes, ensuring that metal filings, metal scraps and loose fixings are removed.

3.17 REPLACE
Replace damaged or marked elements. Remove unused materials from the site.

Consent Issued BC170037

Building Consent 170037
Received 20/2/17

Consent Issued BC170037

ALUMINIUM WINDOWS AND DOORS

Building Consent 170037
Received 20/2/17

DOCUMENTS
Documents referred to in this section are:

NZS 3604	Timber framed buildings
NZS4211	Specification for Performance of Windows
AS 3715	Metal finishing - Thermoset powder coatings for architectural applications

WINDOW AND DOOR SECTIONS
Form all aluminium members from extruded sections. Folded sections are restricted to flashings and concealed members only.

FLASHINGS GENERALLY
Material, grade and colour of head flashings to match the window frames. Ensure that materials used for head, jamb and sill flashings are compatible with the window frame materials and fixings and cladding materials.

Install flashings to heads, jambs and sills of frames as supplied and required by the window manufacturer and as detailed on the drawings. Finish head flashings to match window finish.

Place all flashings so that the head flashing weathers the jamb flashings, which in turn weathers over the upstand of the sill flashing. Ensure that sill flashings drain to the outside air.

Except where window/door frames are recessed, ensure that head flashings over-sail jamb facings by 20 mm at each end.

FIXINGS
Ensure all fixings and bracketing are compatible with aluminium. Do not use electroplated zinc fasteners or brass fastenings.

CONFIRM PREPARATION OF WALL OPENINGS
Confirm that wall openings have been prepared ready for the installation of all window and door frames. Do not proceed with the window and door installation until required preparatory work has been completed.

Required preparatory work includes the following:
-wall cladding building wrap to openings finished and dressed off ready for the installation of window and door frames
-claddings neatly finished off to all sides of openings
-interior linings neatly trimmed ready for installation of jamb liners and completion of air seals to all sides of openings
-installation of flashings (those which are required to be installed prior to frames, including Flexible flashing tape).

FIX FRAMES
Fix frames rigidly in place without distortion, to the window manufacturer's and WANZ Aluminium window handbook requirements, plumb, true to line and face, weathertight and with all openings operating freely.

COMPLETE AIR SEAL
Form an air-tight seal by means of proprietary expanding foam, compressible foam strips, or sealants used with backing rods, applied deep within the reveal to completely fill the gap between joinery and structural framing. Ensure that in combination with the internal linings a complete air seal is created.

WINDOWS AND DOORS TYPE

Manufacturer:	First Aluminium (ChCh)
Type/model:	First Aluminium Extrusion

WINDOW AND DOOR JAMB LINERS, TIMBER

Timber species:	Pine
Grade/treatment:	Finger jointed H3
Thickness:	ex40mm
Finish:	Paint grade

ORGANIC POWDER COATING FINISH

Minimum thickness:	40 microns

Consent Issued BC170037

GLAZING

(refer also to NZS 4223 2016)

Building Consent 170037
Received 20/2/17

Documents referred to in this section are:

NZBC B1/AS1	Structure, 7.0 Glazing
NZBC F2/AS1	Hazardous building materials, 1.0 Glazing
NZBC F4/AS1	Safety from falling, 1.0 Barriers in buildings
AS/NZS 2208	Safety glazing materials in building
NZS 3604	Timber framed buildings
NZS 4223- 2016	Glazing in buildings
	Part 1: The selection and installation of glass in buildings
	Part 3: Human impact safety requirements 2016
	Part 4: Dead, wind and snow loading
NZS 4211	Performance of windows
AS/NZS 4666	Insulating glass units
AS/NZS 4667	Quality requirements for cut-to-size and processed glass

GLASS
Processed glass to AS/NZS 4667, thickness to NZS 4223 parts 1, 3 and 4 unless otherwise specified:
-Clear float glass: Clear annealed transparent float glass
-Patterned glass: Translucent, annealed, rolled glass with a decorative pattern on one surface.
-Laminated glass: Grade A safety glazing material to AS/NZS 2208 with PVB or CIP resin interlayer.
-Toughened glass: Grade A safety glazing material to AS/NZS 2208.

SAFETY GLASS
All windows noted with “SG” on the elevations require Grade A safety glass. (All glazing in bathrooms <2m requires Grade A safety glass)

MIRROR GLASS
Float mirror glass to NZS 4223, part 1, clause 101.2.2.2: Silvering quality (selection S), with silver and copper plating and 2 coats of protective paint.

GLASS SCREENS
Proprietary shower/bath screens, formed to shape before toughening, complete with matching hardware.

GLAZING TAPE AND GASKETS
Single/double sided pressure sensitive self-adhesive low/medium/high density foam tapes/butyl tapes selected to suit the glazing detail to window manufacturers’ requirements.

SETTING BLOCKS
Santoprene/Neoprene, 80-90 Shore A hardness, set at quarter points or to detail, to support the weight of glass panes.

MIRROR ADHESIVE
Adhesive mirror-mastic and double-sided adhesive tape.

INSTALL GLASS SCREENS
Install shower and bath screens and doors to manufacturer’s requirements. Fix wall channel with silicone sealant.

Consent Issued BC170037

INSULATION

Building Consent 170037
Received 20/2/17

Documents referred to in this section are:

NZBC H1/AS1	Energy efficiency, 2.0 Building thermal envelope
NZS 4214	Methods of Determining the total thermal resistance of parts of buildings
NZS 4218	Energy efficiency – Small building envelope
NZS 4243	Energy efficiency – Large buildings

FIT THERMAL INSULATION
Lay, install, fit and fix insulation to NZBC H1/AS1: Energy efficiency, 2.0 Building thermal envelope. Install in housing to NZS 4218 and in large buildings to NZS 4243.

Friction fit insulation in place to completely fill the whole of the cavities with no gaps and with no folds. Slightly oversize length for friction fit and cut across pad and fill cavity. Cut smaller pieces for smaller spaces and around penetrations. Leave no gaps between, and maintain full thickness of the insulating segments over the whole of the installation. Do not cover vents. No clearance required to CA type lighting fixtures.

THERMAL INSULATION, WALLS

Location:	Exterior walls (excluding garage)
Brand:	Refer to H1 Schedule
R Value:	Refer to H1 Schedule, Energy Efficiency Calculations

THERMAL INSULATION, CEILING

Location:	Ceilings (excluding garage)
Brand:	Refer to H1 Schedule
R Value:	Refer to H1 Schedule, Energy Efficiency Calculations

Consent Issued BC170037

GIB® PLASTERBOARD LININGS

Building Consent 170037
Received 20/2/17

Refer to GIB® EzyBrace™ Systems installation information attached to specification.

Documents referred to in this section are:
AS/NZS 2588 Gypsum linings in residential and light commercial construction - Application and finishing, Part 1: Gypsum plasterboard
BRANZ technical paper P21: A wall bracing test and evaluation procedure

MANUFACTURER'S DOCUMENTS
Manufacturer's and supplier's documents which refer to work in this section are:
General: GIB® Site Guide
Wet area: GIB Aqualine® Wet Area Systems
Bracing: GIB EzyBrace® Systems
Ceilings: GIB® Rondo® Metal Batten Systems

GIB® PLASTERBOARD
Gypsum plaster core encased in a face and backing paper formed for standard and water resistance use to AS 2588.

CEILING BATTENS
GIB® Rondo™ galvanised steel ceiling battens and perimeter channel and GIB® Direct Fix Clip. Install in accordance with GIB® Rondo™ Metal Ceiling Batten Systems.

SCREWS
GIB® Grabber™ drywall screws.

NAILS
GIB® Nails (gold passivated).

TAPE ON TRIMS AND EDGES
GIB® Goldline™ tape-on paper tape and galvanised steel trims and edges and/or GIB® UltraFlex high impact corner mould.

ADHESIVE
GIBFix® All Bond wallboard adhesive.

JOINTING COMPOUND
Bedding compound: GIB Tradeset®, GIB® Lite Blue and GIB ProMix® Taping compound
Finishing compound: GIB ProMix® GIB ProMix®, Lite, GIB® All Purpose and GIB Plus 4®

JOINTING TAPE
GIB® paper jointing tape.

CHECK SUBSTRATE
Do not commence work until the substrate is plumb, level and to the standard required by the sheet manufacturer's requirements. Moisture levels not to exceed 18% at the time of lining.

MOISTURE CONTENT
Maximum allowable moisture content in accordance with AS/NZS 2589.1 for:
Framing at lining: 18% for plasterboard linings

PROTECT
Protect all surfaces, cabinetwork, fittings, equipment and finishes already in place from the possibility of water staining and stopping damage.

LEVELS OF FINISH
Provide the scheduled plasterboard surfaces to the levels of finish specified in AS/NZS 2589

Before commencing work, agree in writing upon the expectation for the final quality of finish. The specified level of finish for each area should be appropriate for the type of decoration and the type and angle of the primary source of illumination specified in that area.

Consent Issued BC170037

TILING

Building Consent 170037
Received 20/2/17

Documents referred to in this section are:

NZBC	D1/AS1 – Slip resistance
AS 2358	Adhesives - For fixing ceramic tiles
AS 3740	Waterproofing of wet areas within residential buildings
AS 3958	Ceramic tiles, 3958.1: Guide to the installation of ceramic tiles
BS 6431	Ceramic floor and wall tiles
BRANZ	Good practice guide: Tiling

QUALIFICATIONS
Carry out tiling work using competent tilers, experienced with the materials and techniques specified.

TEMPERATURE
Do not carry out tiling where the ambient temperature is below 5°C, or onto a substrate with a temperature higher than 40°C.

SUBSTRATE
Ensure that all services and accessories are in place and located to suit the tile layout, with the substrate required for tiling work. Commencement of the work means the substrate and environment are accepted by the tile layer as satisfactory.

CONCRETE FLOORS PREPARATION
Remove from the surfaces all contaminants such as paints, oils, release and curing compounds. Remove all projections, unevenness and loose material to leave a clean, dust and dirt-free surface. Remove all existing finishes down to the concrete & prepare surfaces and carry out the tiling work in accordance with AS 3958.1, as modified by BRANZ Good practice guide: Tiling.

LIQUID WATERPROOFING MEMBRANE (refer to Construction Schedule - “Wet Areas” for system used)

Install waterproofing membrane between the tile adhesive and the substrate. Reinforce all junctions of the waterproofing membrane as per the manufacturer’s recommendations. Install waterproof membranes as follows: -
To walls behind bath - Two tiles high

In waterproofed areas where the cement screed has been laid over the waterproofing membrane, prepare the screed surface by applying a further waterproof coating before laying tiles.

Form screeds in areas where water is used in significant amounts with a deviation from plane of not more than 5 mm over 3 metres. Unless otherwise specified form screeds at 1: 40 minimum.

TILE ADHESIVE
To BS 6431, parts 1 to 23 inclusive & AS 2358.
Adhesives selected for use on proprietary substrates or waterproof membranes to have documented compatibility approval from the respective manufacturers.
Apply and float thick bed cement-based adhesive to a maximum 6 mm bed thickness to the tile manufacturer's requirements. Rib surface with a notched trowel, press tiles and beat it into place with 3 mm joints, and to obtain required coverage of adhesive on the back of each tile.

GROUT
Cement based, compressible and to suit the particular location and use.
Remove spacers. Prepare joints, mix and apply proprietary grout and finish off to the grout manufacturer's requirements. Grout to finish uniform in colour, smooth and without voids, pinholes or low spots.

MOVEMENT CONTROL JOINT SEALANT
To BRANZ Good practice guide: Tiling, section 5.0.

Consent Issued BC170037

CARPETING

Building Consent 170037
Received 20/2/17

Documents referred to in this section are:

AS/NZS 2455.1	Textile floor coverings - Installation practice, Part 1: General
	The New Zealand Carpet Manufacturers' Association Conditions of Warranty and installation guide

QUALIFICATIONS
Carpet layers to be experienced competent workers, familiar with the materials and the techniques specified and with AS/NZS 2455.

EDGE GRIPPER, TAPES, FIXING BARS
To AS/NZS 2455.

BINDER BARS
Anodised aluminium section with a fluted face.

SUBSTRATE
Before starting work inspect the substrate to ensure it will allow work of the required standard and that all fittings and fixtures around which the carpet is to be scribed, are in place.

PROTECTION
Protect adjoining work surfaces and finishes during installation and make good any damage to same.

TAPE
Tape for binding and seaming to be the type and width required by AS/NZS 2455 to suit the specified carpet and the standard of performance required.

LAYOUT
Plan the carpet layout so that seams run lengthways, traffic runs along the seam, light from windows is not across the seam and pile faces away from the main natural light source.

TEMPERATURE
Acclimatise carpet to a room temperature above 15°C through the whole of the installation.

PREPARE FLOOR SURFACE
Prepare floors for laying to AS/NZS 2455 requirements.

INSTALLATION, UNDERLAY
Installation to AS/NZS 2455 Lay at right angles to the carpet direction.

INSTALLATION, TAPED JOINTS
Tape carpet joints, fix grippers to floor, install underlay and carpet, to AS/NZS 2455.

FIX TRIMS
Fix binder bars, carpet to carpet bars, and trims to all junctions with other materials and to carpet edges, to AS/NZS 2455. Ensure that all junctions with other materials are neatly formed, with bars and trims securely fastened to the substrate, 20 mm from each end and at maximum 100 mm centres.

Consent Issued BC170037

PAINTING

Building Consent 170037
Received 20/2/17

Documents referred to in this section are:
Resene: One-Line Specifications and Product Data Manual

PAINT TYPES
All paint coatings to be **Resene** products (which are guaranteed for consistency and performance under ISO 9001 and APAS) prepared, mixed and applied as directed in the One-Line Specifications and Product Data Manual.

GAP FILLERS
Use suitable gap fillers to match the surface being prepared. Any special primers required of the fillers must be satisfied. Refer to **Resene** surface preparation sheets in the One-Line Specifications and Product Data Manual.

INSPECT
Inspect all surfaces to be painted and report any that will not, after the preparation as laid down in the **Resene** surface preparation sheets; allow work of the required standard.
PRIMING AND SEALING
Ensure that all priming and sealing work necessary before or during construction is carried out when required.

ENVIRONMENTAL CONDITIONS
Carry out work within acceptable temperature and humidity limits, with timber dry, all to the requirements of **Resene**.

SHARP EDGES, CRACKS AND HOLES
Sharp edges, cracks and holes if present: remove and/or repair as outlined in the preamble to the **Resene** One-Line Specifications and Product Data Manual.

PREPARE ALL SURFACES
Prepare all surfaces to be coated to the requirements of the **Resene** surface preparation sheets. Use suitable gap fillers to match the surface being prepared. Any special primers required of the fillers must be satisfied. Refer to **Resene** surface preparation sheets.

APPLICATION
Apply paint by brush and/or roller to the requirements of **Resene** to obtain a smooth, even coating of the specified thickness, uniform gloss and colour. Do not spray on site without express permission.

RESENE SPECIFICATIONS
Refer to the **Resene** One-Line Specifications and Product Data Manual for surface preparation, coating sequence and application requirements as they apply to each system. Correct defective work immediately, with any recoating following the system's requirements.

SCUFF BETWEEN COATS
Between all coats remove any dust pick-up, protruding fibres and coarse particles.

FINISHED PAINT SURFACES
All finished paint surfaces to show uniformity of gloss and colour, to have the correct thickness for each coat, and freedom from painting defects such as tackiness and conspicuous brush marks. Finished work to be clean and free of any disfigurement.

PAINT SYSTEMS TO WET AREAS (Plasterboard firstly apply a sealer coat)

Undercoat & Top Coat:	Lustercryl D310	walls/ceilings
Trim:	Lusterglo	architraves, skirting, sills

PAINT SYSTEMS TO INTERIOR AREAS

Undercoat:	Resene ceiling "Flat white"	walls/ceilings
Top coat:	Resene Acrylic "Low sheen"	walls/ceilings
Trim:	Lusterglo	architraves, skirting, sills

Consent Issued BC170037

PAINT SYSTEMS TO EXTERIOR AREAS

Undercoat:	Resene SpaceCote “Flat white”
Top coat:	Resene SpaceCote “Flat white”

Building Consent 170037
Received 20/2/17

Consent Issued BC170037

HOT AND COLD WATER SYSTEM

Building Consent 170037
Received 20/2/17

Documents referred to in this section are:

NZBC G12/AS1	Water supplies
AS/NZS 2642	Polybutylene pipe fittings
NZS 3501	Specification for copper tubes for water, gas and sanitation
NZS 4606	Storage water heaters
NZS 4607	Installation of thermal storage electric water heaters
NZS 4617	Tempering (3-port mixing) valves
DIN 8077	Polypropylene (PP) Pipe dimensions
DIN 8078	Polypropylene (PP) Pipes Types 1, 2 & 3, General Quality
NZS 4305	Energy efficiency domestic hot water systems

Plumbers, Gasfitters and Drainlayers Act 2006

Note: Floor surfaces of any space containing sanitary fixtures or sanitary appliances must be impervious and easily cleaned. (Seal floor when Laundry is in garage)

QUALIFICATIONS
Plumbers to be experienced competent craftsman plumbers, or registered plumbers working under the direction of a craftsman plumber, familiar with the materials and techniques specified.

WATER MAIN POLYETHYLENE
High density polyethylene pipe complete with rubber ring compression type fittings.

POLYBUTYLENE WATER PIPE
Polybutylene tubing to AS/NZS 2642.2 and AS/NZS 2642.3 complete with fittings and accessories brand-matched.

EXPOSED PIPES
Chrome plated copper pipe with chrome plated brass nuts and fittings.
Faucet hoses covered with stainless steel braid and fitted with stainless steel nuts.
White polyethylene composite pipe with white nuts and accessories.
Selected pipework finish to include escutcheon plates and bends and elbows protruding from walls or fittings. All cold water pipework installed in external walls or exposed to the elements to be lagged and protected from frost.

VALVES
Pressure reducing or limiting valve, filter, non-return valve, cold water expansion valve, pressure relief or temperature valve, pressure relief valve and isolating valves to NZBC G12/AS1: Water supplies. (Set to 55º) The storage water heater control thermostat shall be set at a temperature of not less than 60º C to prevent the growth of Legionella bacteria.

15mm copper pressure relief valve from HWC (100mm max straight or bent) to discharge into 20mm @ 1:40 copper relief drain. The drain to discharge to over GT with 25mm air gap. (As per NZBC G12/AS1 cl.6.7 and Fig 12)

Tempering valve to NZS 4617 to NZBC G12/AS1: Water supplies.
Install 1 metre minimum from outlet of hot water cylinder and to manufacturer’s instructions.

ELECTRIC HOT WATER CYLINDER, MAINS PRESSURE
To NZS 4606.3, ceramic-coated steel thermal storage cylinder, insulated and complete with fittings required for installation by the manufacturer.

Install where shown complete with all the necessary fittings to the cylinder manufacturer's requirements and in accordance with NZBC G12/AS1: 6.10. Valve-vented systems to NZS 4607.

ELECTROLYTIC ACTION
Avoid electrolytic action by eliminating contact or continuity of water between dissimilar metals.

EXCAVATE
Excavate for the water main to a firm, even trench base in straight runs. Allow to backfill.

Consent Issued BC170037

WATER MAIN
Lay a minimum of 500 mm below ground level (600 mm under driveways) from the onsite supply OR utility network operator's supply through a gate valve and meter toby box to the building. Lay marker tape above the water main in backfill.

POLYBUTYLENE/POLYETHYLENE WATER SUPPLY
Size the piping layout to eliminate loss of pressure at any point by simultaneous draw-off. Run pipes complete with all fittings, support and fixing, and jointed to the pipe manufacturer's specifications, all to NZBC G12/AS1. Conceal pipework and pressure test before the wall linings are fixed.

INSTALLING HOT WATER PIPE INSULATION
Insulate all hot water pipes in accordance with the insulation manufacturer's instructions. Cut insulation sections tight between timber framing and tight between the webs of studs. Where hair felt is used, wrap around pipes in two layers in opposite directions and secure with galvanised steel wire ties.

PENETRATIONS
Provide and fit collars and escutcheon plates to match the pipework at all penetrations through constructions.

INSTALL TAPS AND FAUCETS
Install taps and faucets in accordance with the tap manufacturer's requirements. Flush out on completion. Check that washers or ceramic discs are operating correctly.

TESTING OF PLUMBING
NZBC G12/AS1 7.5 Watertightness
7.5.1 The water supply system shall be tested to ensure watertightness. An acceptable testing method is to:
a) Subject the hot and cold system to a pressure of 1500 kPa for a period of not less than 15 minutes, and
b) Inspect the system to ensure that there are no leaks.

WATER MAIN
Material: Polyethylene
Internal diameter: (ID)20mm/ (OD)25mm

WATER PIPE
Material: Polybutylene
Nominal bore: (ID)20mm/ (OD)25mm

INSULATION FOR HOT WATER PIPES
Brand/type: Euro lagging
Inside diameter: 16/22 mm

ELECTRIC HOT WATER CYLINDER
Brand/model number: Rheem
Capacity: 250 litres

NZBC G12/AS1

Table 7: Water Supply Pipework Support Spacing
Paragraph 7.1.3

Pipe material	Pipe diameter (mm)	Maximum distance between supports (m) Vertical pipe	Graded and horizontal pipe
Copper	10 – 15	1.5	1.2
	20 – 25	2.0	1.5
Galvanised steel	15 – 20	2.0	1.5
	25	3.0	2.5
uPVC	15 – 20	2.0	1.0
	25	2.4	1.2
Polyethylene and polybutylene (cold water supply)	15 – 20	1.5	0.75
	25	1.8	0.9
Polybutylene (hot water supply)	15 – 18	1.0	0.6
	20 – 22	1.4	0.7

Note:
The spacing for these pipe materials is based on the pipes being located within the *building* structure.

Consent Issued BC170037

Building Consent 170037
Received 20/2/17

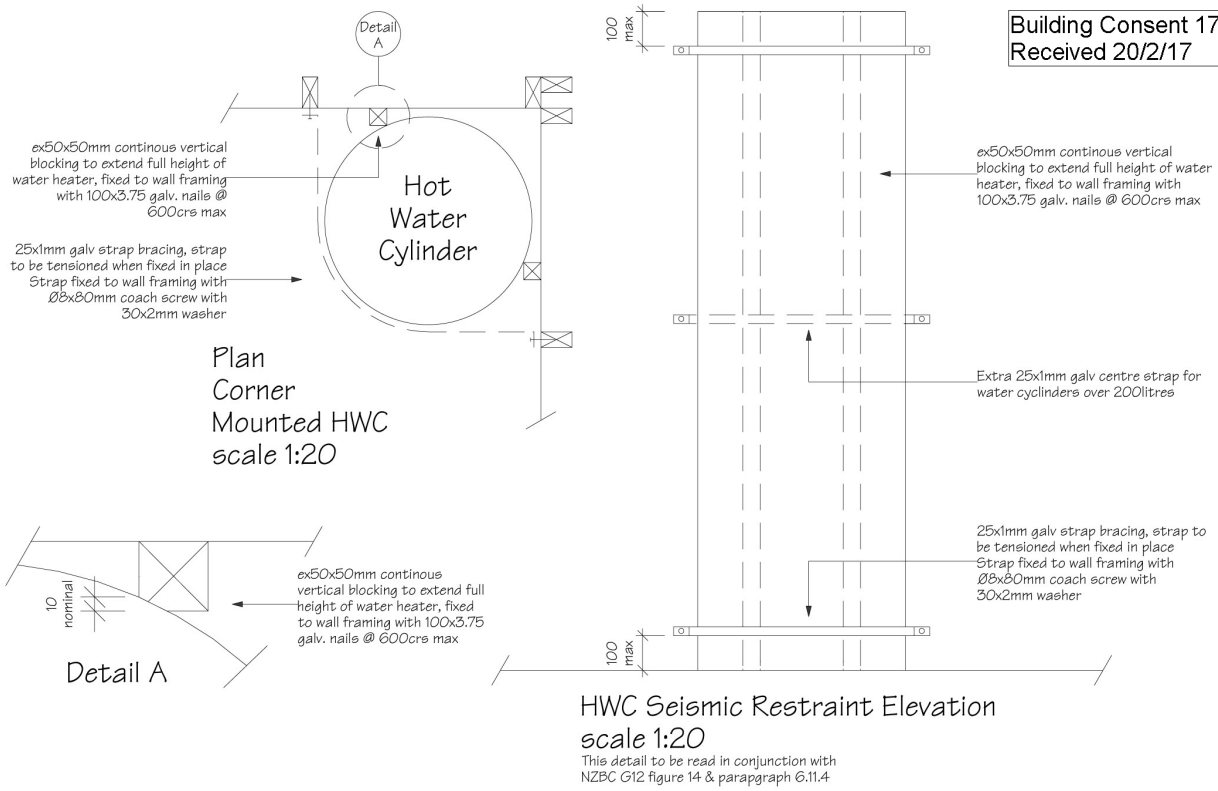

NZBC G12/AS1

Figure 16: Tempering Valve Installation
Paragraph 6.14.2 a)

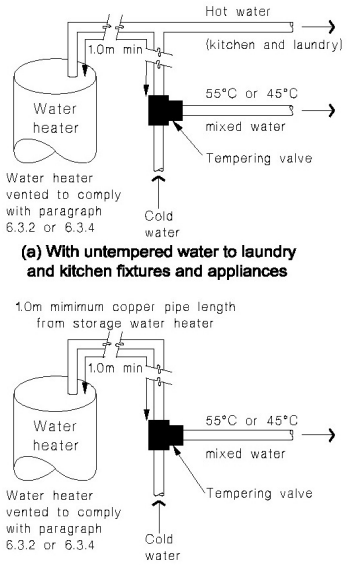

Note:
1. For optimum system efficiency the tempering valve, for other than a mains pressure system, may be located as low as practicable to achieve the manufacturer's recommended head, at the tempering valve.
2. 1.0m minimum copper pipe length from storage water heater.

Figure 8: Mains Pressure Storage Water Heater System (unvented)
Paragraphs 6.1.2 and 6.2.1 b)

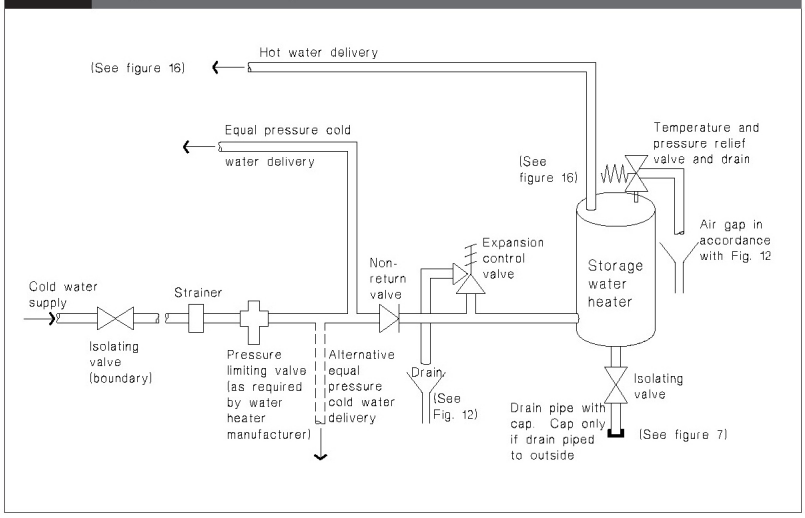

Consent Issued BC170037

RAINWATER SYSTEMS

Building Consent 170037
Received 20/2/17

Documents referred to in this section are: -
NZBC B1, B2, E1 & E2
AS 1397 Steel sheet and strip - hot-dipped, zinc-coated or aluminium/zinc-coated
Workers to be either competent craftsman plumbers, or registered plumbers working under the direction of a craftsman plumber, or roofers, familiar with the materials and techniques specified.

Aluminium/zinc alloy coated pre-painted steel
ALUMINIUM/ZINC ALLOY PRE-PAINTED SHEET STEEL
0.55 mm sheet steel coated to AS 1397, pre-painted.

ALUMINIUM/ZINC ALLOY COATED PRE-PAINTED STEEL SPOUTING
Profile, jointing, brackets and fittings brand matched and complete to the spouting manufacturer's specifications.

DOWNPIPES
Complete with stand-off brackets and galvanised screws.

FLASHINGS GENERALLY
0.55 mm sheet steel galvanised to AS 1397, aluminium/zinc coated to AS 1397, 1.8 mm (20 kg/m^2) copperised pure lead, 0.5 mm half hard copper sheet, or proprietary rubberised perforated aluminium strip, all to location, compatibility and design requirements of BRANZ Bulletin 304 Flashing design.

Aluminium/zinc alloy coated pre-painted steel
ALUMINIUM/ZINC ALLOY COATED PRE-PAINTED STEEL FASCIA

Shape/size:	Refer to construction schedule
Brand/type:	Coloursteel
Paint coating type:	Endura/Max

ALUMINIUM/ZINC ALLOY COATED PRE-PAINTED STEEL SPOUTING

Shape/size:	Multiline Quad (Cross Sectional Area – Refer to construction schedule)
Brand/type:	Coloursteel
Paint coating type:	Endura/Max

ALUMINIUM/ZINC ALLOY COATED PRE-PAINTED STEEL DOWNPIPES

Shape/size:	Refer to construction schedule
Paint coating type:	Endura/Max

Consent Issued BC170037

SANITARY PLUMBING

Building Consent 170037
Received 20/2/17

Documents referred to in this section are:

NZBC G1/AS1	Personal hygiene
NZBC G13/AS1	Foul water - sanitary plumbing
NZBC H1/AS1	Energy Efficiency – hot water systems
AS/NZS 1260	PVC pipes and fittings for drain, waste and vent applications
AS/NZS 1260	PVC-U pipes and fittings for drain, waste and vent application

Plumbers, Gasfitters and Drainlayers Act 2006

QUALIFICATIONS
Carry out work by or under the direct supervision of a person registered under the Plumbers, Gasfitters and Drainlayers Act 2006.

UPVC WASTE, SOIL AND VENT PIPES
UPVC pipe to AS/NZS 1260 complete with fittings brand-matched to the pipe manufacturer's requirements.

EXPOSED PIPES AND TRAPS
Chrome plate on copper pipes and associated copper and brass fittings.
White polybutylene or PVC, including all associated fittings.

SEALANT, SANITARY FIXTURES
For between sanitary fixtures and accessories and adjacent floor or wall surfaces.
1-part, silicone, containing mildew resistant agents.
Colour: White

EXECUTION GENERALLY
Carry out this work and complete all tests to NZBC G1/AS1: 2.0, 3.0 and G13/AS1.

ELECTROLYTIC ACTION
Avoid electrolytic action by eliminating actual contact or continuity of water between dissimilar metals.

INSTALL SANITARY FIXTURES
Fit and install sanitary fixtures and associated screens, elements and hardware, plumb, true to line and rigid, to the fixture manufacturer's requirements. Supply standard chrome plated brass wastes and plastic plugs on chrome plated chains with all basins, tubs and baths.

INSTALL TRAPS, WASTE AND VENT PIPES
Connect waste outlets to traps and run waste pipes and back vents concealed, sized and fixed to NZBC G13. Discharge wastes into the drainage system stack, soil pipe, or gully trap as shown. Bird proof mesh to all roof vents and vermin proof mesh to all untrapped waste pipes.

PENETRATIONS
At penetrations through constructions provide and fit collars and escutcheon plates to match pipework. Penetrations to the DPM under the slab to be sealed with DPM tape. Wall penetrations as per E2/AS1 Figure 68.

Metal Tile roof penetrations as per E2/AS1 Fig 53 & 54

NZBC G13/AS1

Table 7: Distances Between Supports
Paragraph 6.2.1

Material	Pipe diameter (mm)	Maximum distance between supports (m) Vertical pipe	Graded pipe
Copper pipes	32 to 50	3.0	2.5
	greater than 50	3.5	3.0
uPVC pipes	32 to 50	1.0	0.5
	65 to 100	1.2	1.0
	greater than 100	1.8	1.2

Consent Issued BC170037

DRAINAGE

Building Consent 170037
Received 20/2/17

Documents referred to in this section are:

NZBC B1/AS1	Structure – general
NZBC E1/AS1	Surface water
NZBC G13/AS2	Foul Water
AS/NZS 1254	PVC pipes and fittings for storm and surface water applications
AS/NZS 1260	PVC pipes and fittings for drain, waste and vent applications
AS/NZS 4130	Polyethylene pressure pipes (PE)
AS/NZS 4058	Precast concrete pipes (pressure and non-pressure)
NZS 3104	Specification for concrete production
NZS 7643	Installation of unplasticised PVC pipe systems
	Plumbers, Gasfitters and Drainlayers Act 2006

QUALIFICATIONS
Drainlayers to hold a current licence within the terms of the Plumbers Gasfitters & Drainlayers Act 2006 and be experienced, competent and familiar with the materials and techniques specified.

CONCRETE
17.5 MPa ordinary grade to NZS 3104.

uPVC PIPES
uPVC Pipes bends, junctions, fittings and joints to AS/NZS 1254 and AS/NZS 1260.

GULLY TRAPS
To NZBC G13/AS2: 3.3, complete with grating. (NZBC G13 Fig 2)

DRAINAGE AND FILLING MATERIALS
Granular: Clean gravel or crushed stone or a blend of these. Particle size from minimum 7 mm to maximum 20 mm & AP40 compacted at 150mm layers under slab. (use AP40 compacted at 150mm layers under slab as drain bedding)
Selected: Fine grain soil or granular material suitable for bedding; excluding topsoil.
Ordinary: Top soil or other excavated materials.

STORMWATER
Dispose of stormwater on site as shown on the drawings.

CONCRETE ENCASEMENT
Concrete encase shallow drains and drains under driveways, on a 100 mm deep 17.5 MPa concrete bed reinforced with three 10 mm mild steel bars. Surround pipes with a polythene membrane to allow movement and encase in 100 mm 17.5 MPa concrete.

BEDDING AND BACKFILL
Backfill drain lines in 150 mm layers, well tamped but without disturbing the drains. Finish off with 150 mm of topsoil, slightly mounded above the finished ground line. As per NZBC G13/AS2 Bedding and backfilling

SUPPORT AND THERMAL MOVEMENT
The plumbing system shall accommodate without failure the expected longitudinal movement in pipes resulting from temperature changes. All copper and PVC-U pipes shall incorporate expansion joints to comply with clause NZBC G13/AS1 6.3.1

TESTING OF DRAINAGE
NZBC G13/AS1 - 7.0 Watertightness
7.1 Test methods
7.1.1 All above ground sanitary plumbing pipework shall be tested by water test or air test to verify that the system is watertight.
7.1.2 Water test: The method described in Section 10 of NZS 7643 may be used for ensuring watertightness of above ground sanitary plumbing pipework.
7.1.3 Air tests may be carried out in accordance with either clause 12.3.2 of AS/NZS 3500.2.2 or Paragraph 8.3 of E1/VM1.
NZBC G13/AS2 - 6.0 Watertightness
6.1 Testing

Consent Issued BC170037

6.1.1 All sections of the drainage system shall be tested by water test or air test to ensure watertightness.

COMMENT:

Testing should be undertaken before backfilling for the easy identification of any leaks.

Building Consent 170037
Received 20/2/17

6.1.2 Water test

NZS 7643 Section 11 gives an acceptable method for ensuring watertightness of below ground uPVC drainage pipework.

6.1.3 Air tests may be carried out in accordance with either clause 12.3.2 of AS/NZS 3500.2.2 or Paragraph 8.3 of E1/VM1.

NZBC G13/AS2

Figure 7: **Bedding and backfilling**
Paragraphs 5.2.1, 5.3.1 and 5.4.1

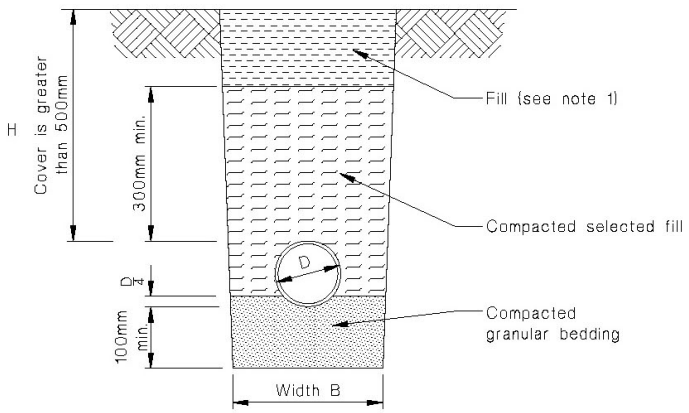

(a) Bedding type 'B' of NZS 7643
Cover greater than 500mm

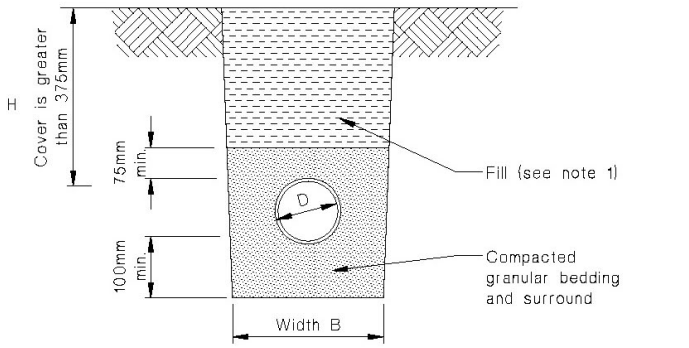

(b) Bedding type 'D' of NZS 7643
Cover greater than 375mm

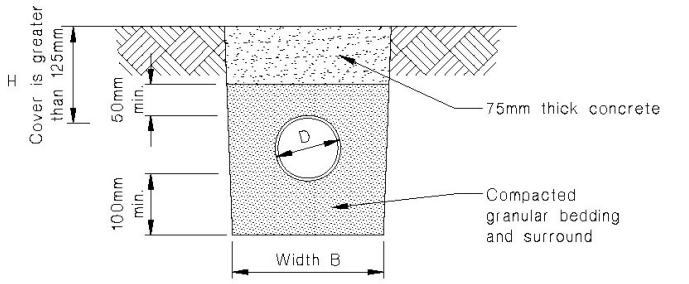

(c) Cover between 125mm and 375mm

NOTE:
1. Fill shall be:
-Ordinary fill where drains are located below gardens and open country.
-Compacted selected fill where the drains are located below residential driveways and similar areas subject to light traffic.

Consent Issued BC170037

ELECTRICAL

Building Consent 170037
Received 20/2/17

Documents referred to in this section are:

NZBC F7/AS1	Warning systems, 3.1 Domestic smoke alarms
NZBC G2	Laundering – Service connections
NZBC G3	Food Preparation and Prevention of Contamination
NZBC G8	Artificial Light - Illuminance
NZBC G9/AS1	Electricity, 1.0 Electrical Installations within domestic dwellings
AS 1670	Part 6: Smoke Alarms
AS/NZS 3000	Wiring Rules
AS/NZS 3008	Electrical installations - Selection of cables 3008.1.2: Typical New Zealand installation conditions
AS/NZS 5000.2	Electric cables - Polymeric insulated - For working voltages up to and including 450/750 V
NZECP 51:2004	New Zealand Electrical Code of Practice for Homeowner/Occupier's Electrical Wiring Work in Domestic Installations

PVC-insulated cables for electric power and lighting
Electricity Regulations
New Zealand electrical codes of practice (ECP)

Illuminance at floor level shall be no less than 20 lux as per NZBC G8.3 - Performance requirement. Minimum requirement: 1 standard lighting fixture per 10m² minimum. (per room) Hallway requires 1 lighting fixture per 4.7 lineal meters minimum. Lighting areas based on 100w closed abutted (CA80 or CA135) down light, 100w batten holder & 100w ceiling pan. (Where energy efficient bulbs are used they shall have an equivalent wattage to the minimum stated)

LIGHTING SCHEDULE (Minimum per area/room)

2 LF/room	Living, kitchen, dining, family, activity, media, lounge & bedroom.
1 LF	Hall (1 LF per 4.5 lineal metres min.)
1 LF/bay	Garage
1 LF	Entry, toilet, bathroom, laundry, WIR, store.
1 LF	Other rooms (1 LF per 10m² min.)

KEY

LF	Standard Lighting Fixture – 100w Down light (CA80 or CA135), 100w Batten holder or 100w Ceiling Pan
H	Halogen – 50w (1 H per 5m² min. or 1 H per 2.2 lineal metres)

LIGHTING LAYOUT EXAMPLES

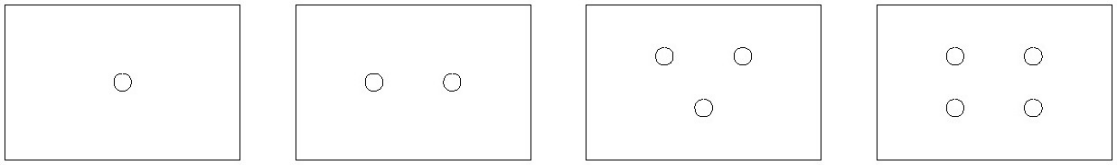

Single (1LF) Double (2 LF) Triple (LF) Quad (4 LF)

Lighting to be spaced out evenly.

Note: The above lighting schedule is the minimum requirement. The final layout is by owner on site but will not be less than the above schedule.

COMPLY
Comply with the referenced Electricity Regulations, Standards and the New Zealand electrical codes of practice for listed and prescribed work and with the utility network operator's requirements. Apply for the service connection.

QUALIFICATIONS
Carry out work by or under the direct supervision of a holder of a practising certificate under the Electricity Regulations.

Consent Issued BC170037

CERTIFICATE OF COMPLIANCE
Supply a certificate of compliance to the owner, as required by the Electricity Regulations, and in particular, clauses 16, 34 and 35. Allow the network utility operator to test before the meter installation, listed work inspection, polarity check and livening of supply.

MAINS SUPPLY, SINGLE PHASE
Tough plastic sheathed neutral screened cable to AS/NZS 5000.2 and AS/NZS 3008.1.2, with a minimum rating of 60 amps per phase. Include pilot cable where required by network utility company.

MAIN EARTH - Provide a plastic toby box or UPVC tube to contain and protect the earth pin. Fix the connecting earth wiring securely against wall surfaces. Earth Bar to be bonded to the reinforcing mesh.

RCD protection to AS/NZS 3000

Bond together and to earth all plumbing fittings not adequately isolated, to the Electricity Regulations and to the fitting manufacturer's requirements.

CABLES
Tough plastic sheathed copper conductors to AS/NZS 5000.2, stranded above 1.0 mm^2, and to AS/NZS 3008.1.2. Minimum sizes. Increase sizes if the method of installation, thermal insulation, cable length or load will reduce the cable rating below that of the connected load, or produce an excessive voltage drop.

Heat resistant cable for final connections to all heated appliances, and high temperature cable in ambient conditions may be above 35°C.

METER BOX
Proprietary manufactured, zinc plated powder coated metal case, weatherproof if mounted outdoors, and complete with meter mounting, main switch and fuse.

DISTRIBUTION BOARD
Proprietary manufactured heavy duty plastic fire resistant enclosed construction, complete with neutral and earth busbars, MCBs, 30 mA RCDs and 60 amp main switch, complete with 20% spare capacity to AS/NZS 3000. All protective devices: 6kA MCBs of the appropriate rating.

MINIATURE CIRCUIT BREAKERS
Miniature moulded case circuit breakers

WALL BOXES
Standard size in plastic, with 2 or more gang size, all screw fixed.

SWITCH UNITS
Sixteen amp minimum rated, 230 volt polycarbonate flush plate units.

Fit all single and double switch units and socket at the following heights (to the centre of the unit) unless shown otherwise on the drawings.
Switch Units: 1000 mm & at least 500mm from corners.
Socket Units: 150 mm above work benches,

Mount switches vertically and socket units horizontally. Label all switch units that control electrical equipment by colour filled engraving on the switch plate.

HOT WATER SYSTEM SWITCH
One way 20 amp switch complete with cable clamp for flexible PVC conduit to element enclosure.

SWITCHED SOCKET UNITS
Ten amp, 230 volt polycarbonate flush plate 3 pin flat NZS combination switch units, single or multi gang.

SMOKE ALARMS
To AS 1670 & Smoke alarms shall be installed on or near the ceiling in accordance with AS 1670.6 and the manufacturer’s instructions.

LAUNDRY
No less than 1x 10amp socket outlet to be provided adjacent to space provided for washing machine.

Consent Issued BC170037

KITCHEN
No less than 1x 10amp socket outlet to be provided in space behind Refrigerator.
Provide 1x fixed outlet to cooking appliance

Building Consent 170037
Received 20/2/17

GARAGE DOOR CONTROLLERS
Provide single switched socket outlet for the door controller to plug into.

LIGHT FITTINGS
All fittings complete with lamps, install light fittings in locations as directed by the owner, and in accordance with the fitting manufacturer's requirements and no less than the lighting schedule.
All downlights to be closed and abutted, halogen downlights to have factory heat shields.

CIRCUIT PROTECTION
Install MCBs to protect each final sub circuit sized for circuit maximum loading.

Domestic
Install RCD protection at the switchboard of final sub circuits controlling socket outlets and lighting except for:
- Fixed cooking equipment, heating, HWC and A/C units

SET-OUT
Unless specifically detailed, confirm on site the exact location, disposition and mounting heights of all outlets, fittings, equipment, penetrations, and use of exposed wiring with the owner. Fix outlet items level, plumb and in line.

CABLING
Install with a maximum of 17 light outlet units or 6 double or single switched socket units on any circuit. Minimum 2 lighting circuits per installation. Separate circuits for all electric heating appliances. All cabling run concealed. No TPS cable laid directly in concrete. Locate holes in timber framing for the passage of cables at the centre line of the timber member. Install cable in conduits where required to pass through concrete or underground.
Complete all labelling in clear machine printed permanent manner. Include label under each controller, switch and circuit breaker on distribution boards. Include a warning notice if light dimmers are used in the installation. List the rating of each circuit.

WALL BOXES
Flush mounted in cavity construction.

EXTRA LOW VOLTAGE LIGHTING
Where remote transformers are used for ELV lamps, connect from transformer to lamp with minimum 2.5 mm^2 conductor, to ensure voltage drop in transformer and conductor does not exceed 0.8 volts. Connect lamps 50 watt or greater matched to no more than one per transformer, located as close as practicable to the lamp. Ensure transformers and rear of light fittings are adequately ventilated and clear of any thermal insulation.

ELECTRIC HOT WATER SYSTEM
Wire as a separate circuit through a wall-mounted isolating switch, with the cable from switch to element encased in heat resistant conduit, clamp fixed at each end. Hot water cylinders, thermostats and 3000 watt element supplied and fitted under HOT AND COLD WATER SYSTEM.

COMPLETION
Leave work operating correctly, with equipment clean and all lamps operational.

Consent Issued BC170037

Management of Site Safety

Building Consent 170037
Received 20/2/17

The main contractor to undertake best practice systems to manage health and site safety. Building supervisors are all site safe qualified. The contractors are inducted on our Health and Safety policy and also provide the main contractor with documentation on their Health and Safety Management systems and also fill out a health and safety questionnaire.

The main contractor (Noted on specifications cover sheet) undertakes to manage hazards by elimination, isolation or minimisation in that order.

There is a Hazard Register posted on site at all times and all sub trades and suppliers required to record any potential hazards introduced onto site.

Earthworks and trenching will generally be back filled on same day but if this is not possible, barriers will be erected to minimise hazard.

To ensure site is clear, work areas are to be kept clean and tidy with receptacles provided and areas allocated areas for waste and refuse.

Chemicals and paints will be stored in original containers in a secure and well ventilated place appropriate to the product.

Building materials stored on site will be stacked so they cannot fall or protrude dangerously.

Public visiting site are instructed to report to site foreman who will ensure public are provided with a high visibility vest which must be worn on site at all times. Site foreman to ensure public are detoured from hazardous areas.

Fencing to keep out unauthorised personel. Under NZBC F5 – Construction and Demolition Hazards Clause 1.1.1, a 2.0 metre fence is required for protection of public.

Non-work Periods

The main contractor and sub contractors have responsibility to ensure public is not endangered in any way and site is safe during non-work periods

All sites have sign posted at entry stating ‘Authorised personnel access only and please report to site foreman.

Tools locked away at end of day.

Consent Issued BC170037

Building Consent 170037
Received 20/2/17

EROSION AND SEDIMENT CONTROL PLAN

(Please also refer to the Drainage Plan and Rainwater & Drainage Sections of this Specification.)

The main contractor will use the relevant erosion and sediment control measures to meet the requirements for this site.

Provide protection for neighbouring sites from rubbish or sediment contamination.

Erosion Control
Minimum existing vegetation and soil will be removed from the site,
Sediment Control measures will be in place before earthworks begin
Earthworks will keep to a minimum.
Stockpiles will be delivered as late as possible, located within the sediment control zone, and protected from runoff and covered where necessary.
Trenching will where possible be done at one time for all services. Contractors will be requested to set out, dig, and backfill trenches in a such as way as to minimise erosion and runoff.
Hard wastes will be placed in the bins provided by the Company.
Clients will be encouraged to landscape and cover exposed soil on their site as soon as possible.

Sediment and Run-off Control
Upslope water will be diverted from the site where possible.
Sediment controls will be placed at the bottom of the site to minimise runoff leaving the site. These may involve sediment fencing, supplemented with straw bales on steep areas.
Existing vegetation will be used where possible to minimise runoff
Sump inlets will be protected from sediment runoff.
Storm water down pipes will be connected as soon as practicable to the permanent Storm water system once the roof is laid.
Contractors will be required to comply with these control measures
Wash down and wet trade runoff will be trapped and controlled on site
Sediment control measures will be regularly inspected and maintained.

Site Access
Stabilised access from the road to the platform will be provided.
A runoff diversion bund will be included in the site access way if required.
Sediment on footpaths and roads will be removed as soon as practicable

SECTION 6

Technical Information

(Manufacturer's Information)

- ~~Septic Tank & Effluent Design incl. fencing~~
- ~~ECAN Approval Documents~~
- ~~Gas Fire~~
- ~~Heating Unit~~
- ~~Solar Panels~~
- ~~Central Heating Systems~~
- A4 Details/Acceptable Solution Extract
- ~~Well/Water Test~~

Consent Issued BC170037

Building Consent 170037
Received 10/3/17

THIS DESIGN AND DRAWING IS COPYRIGHT OF E2ENVIRONMENTAL LTD AND SHALL NOT BE USED OR REPRODUCED WITHOUT WRITTEN AUTHORITY

e2environmental CONSULTING ENGINEERS
Unit 1/46 Acheron Drive PO Box 31159 Christchurch
P 64 3 358 4955 www.e2environmental.com

Rev	Comments	Approved	Date
A	AS BUILT	JW	

Client: FREEMAN HOMES LTD

Project: ELM GREEN SUBDIVISION STAGES 2 & 3

Title: STORMWATER RETICULATION AS-BUILT

Designed by	Drawn by	Checked by	Approved by	Approved by Date
	MP	JW	JW	

Status: AS BUILT

Scale: A1 1:500 A3 1:1000

Project No: 12026-02

Drawing No: 300

Revision: A

Consent Issued BC170037

Building Consent 170037
Received 10/3/17

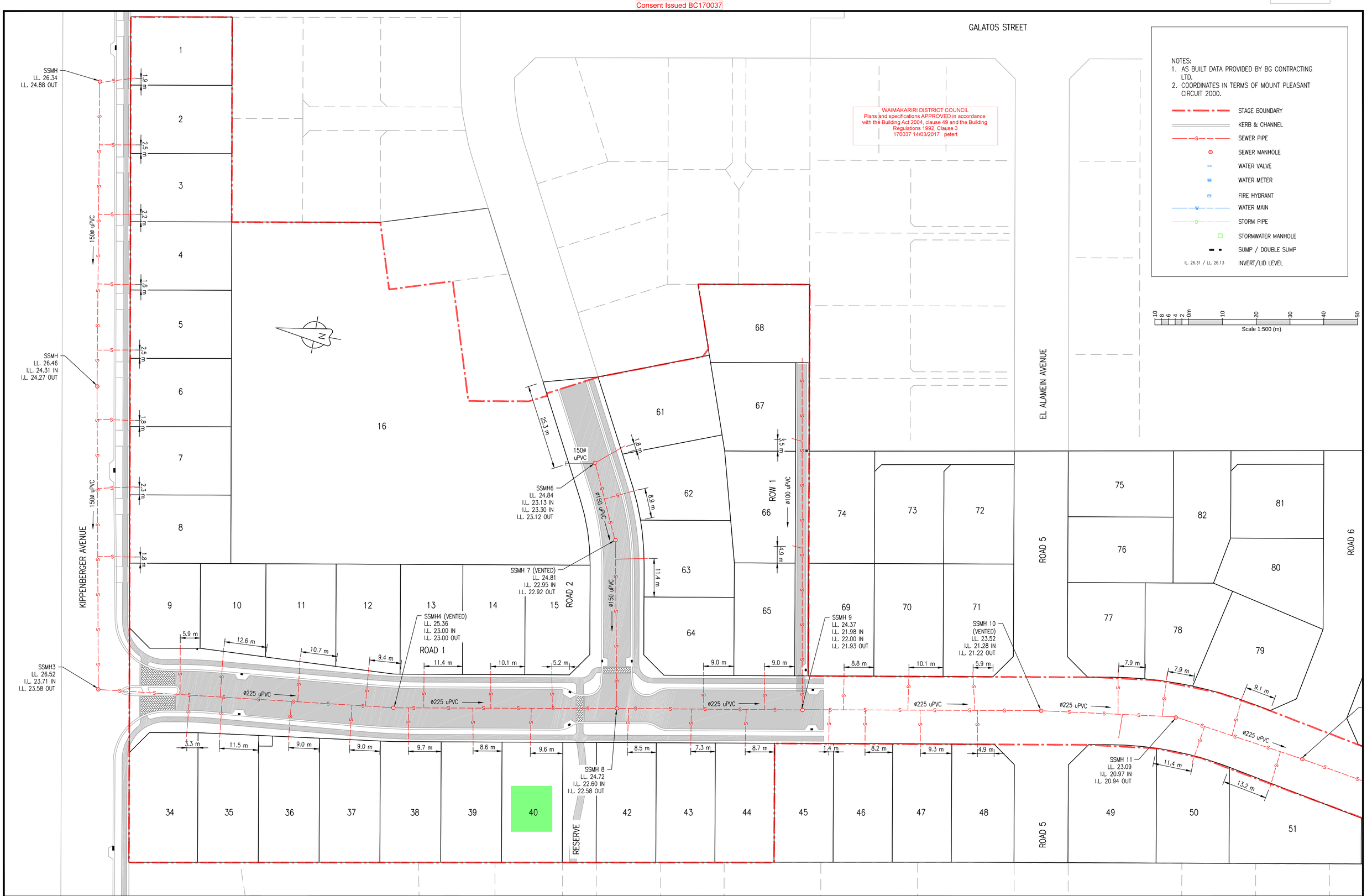

THIS DESIGN AND DRAWING IS COPYRIGHT OF E2ENVIRONMENTAL LTD AND SHALL NOT BE USED OR REPRODUCED WITHOUT WRITTEN AUTHORITY

e2environmental CONSULTING ENGINEERS
Unit 1/46 Acheron Drive PO Box 31159 Christchurch
P 64 3 358 4955 www.e2environmental.com

Rev	Comments	Approved	Date
A	AS BUILT	JW	

Client: FREEMAN HOMES LTD

Project: ELM GREEN SUBDIVISION STAGES 2 & 3

Title: SEWER RETICULATION AS-BUILT

Designed by	Drawn by	Checked by	Approved by	Approved by Date
	MP	JW	JW	

Status: AS BUILT

Scale: A1 1:500 A3 1:1000

Project No: 12026-02

Drawing No: 310

Revision: A

Consent Issued BC170037

BC170037

DUCTILE PLUS RESIDENTIAL MESH

Designed to meet the Department of Building & Housing (DBH) new B1 Compliance standard, with equivalent mass to 2.27kg/m². Weld strength improved by 22% (for 6.1mm) and 100% (for 7.5mm) compared to the 5.3mm wire used for 665 mesh.

Ductile Plus 62 & 62L Mesh

- SE62 Plus — Easy to transport size 5.03 x 2.02
- SE62L— Larger 6.05 x 2.42 mesh size to maximise handling and lapping

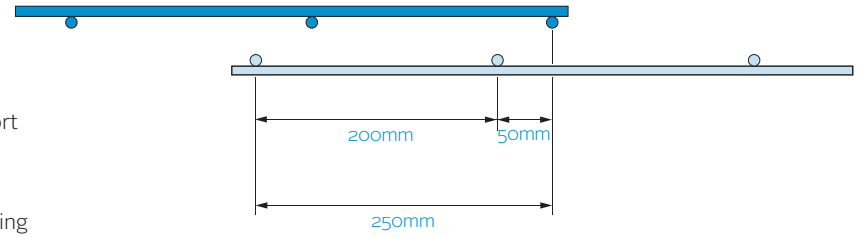

WAIMAKARIRI DISTRICT COUNCIL
Plans and specifications APPROVED in accordance with the Building Act 2004, clause 49 and the Building Regulations 1992, Clause 3
170037 13/03/2017 petert

*Diagram not to scale

Ductile Plus 73DE, 73LDE Mesh

- 300mm Bar spacing for easy 'step through' while placing and working on site
- Easy lapping with double edge configuration

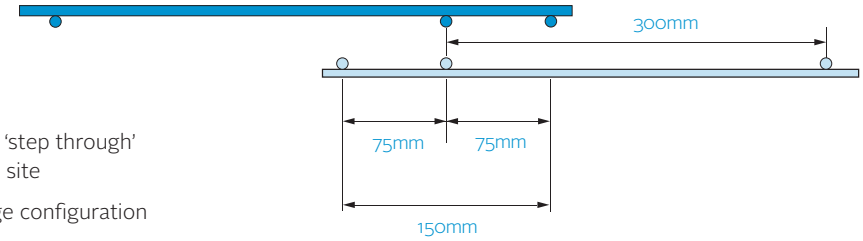

Ductile Plus 73LDE only:

- Large 14.49m² nett cover for less wastage in lapping = cheaper per square metre

*Diagram not to scale

MESH PROPERTIES

- All construction meshes have double edge bars to optimise the net cover of the sheets
- The required lap as per AS/NZS 3101:2006 Clause 8.6.2 (square + 50mm: with 150mm lap as min)
- Sheets individually tagged
- Test certificates available
- Independently tested to verify compliance to AS/NZS 4671:2001 Ductility 500E standards
- Grade 500E (seismic) as per AS/NZS4671
- Tensile Ratio (R_m/R_e) 1.15 to 1.40
- Uniform elongation (A_{gt}): min 10%

Uniting both STEELPLUS + WIREPLUS

NEW ZEALAND MADE

Consent Issued BC170037

BC170037

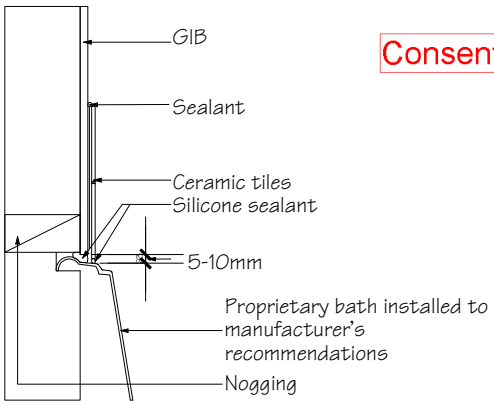

A Bath/Wall Detail

Bath - Tiled Upstand GAW-D013

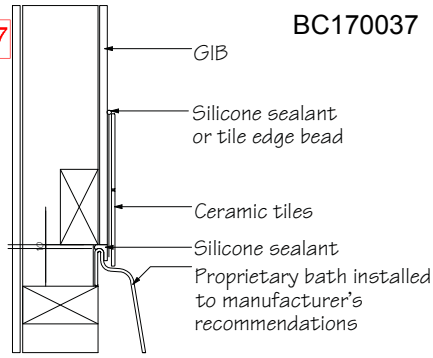

B Bath/Wall Detail

Bath - Tiled Upstand GAW-D014

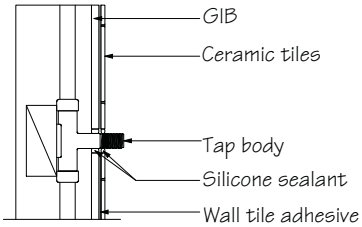

Note:
Where impact noise from pipes is an issue, fix all pipes on resilient brackets.

C Penetration Detail

Bath - Tiled Upstand GAW-D015

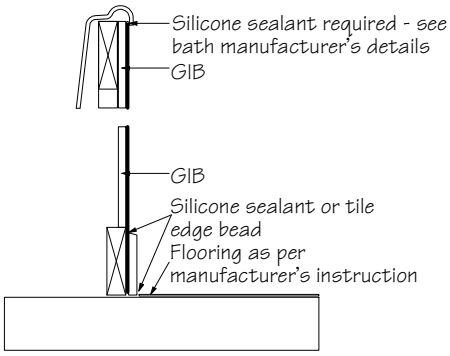

D Bath Plinth Detail

Bath - Tiled Upstand GAW-D016

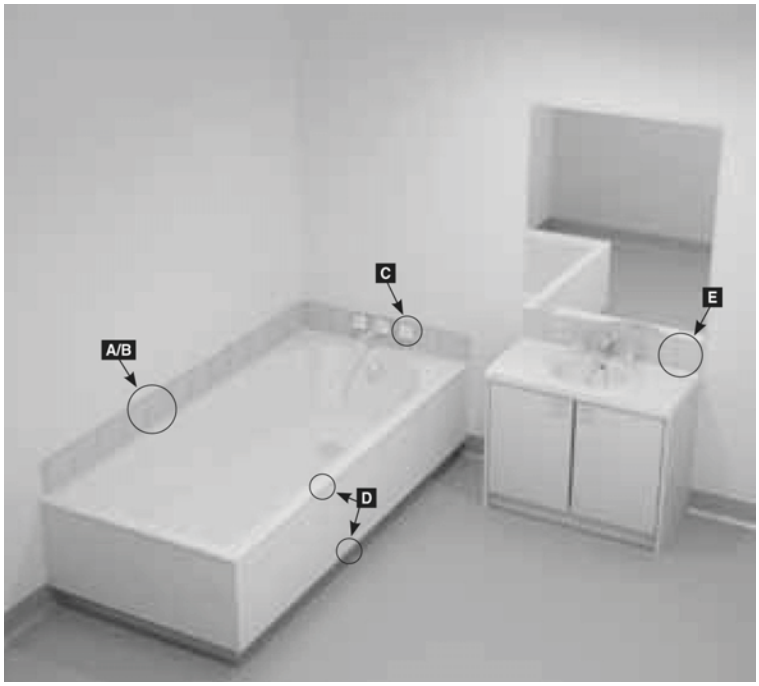

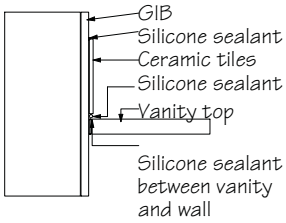

E Vanity Top Detail

Bath - Tiled Upstand GAW-D017

Bath - Tiled Upstand

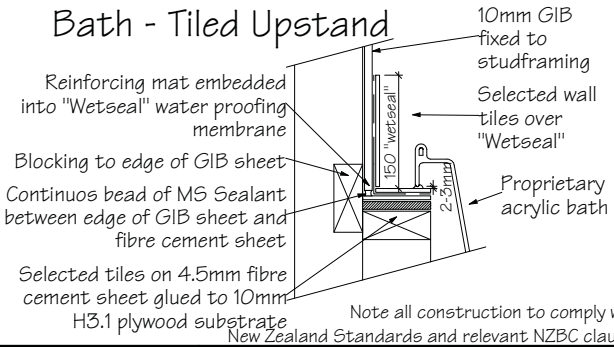

Note all construction to comply with New Zealand Standards and relevant NZBC clauses

Title: Bath - Tiled Upstand			
Drawn. SC	Date 14-08-09	Chk.	Client: Details
Sales HQ	Plot Date 30/03/2010	Scale @ A4 NTS	
Job Number 00			

WAIMAKARIRI DISTRICT COUNCIL
Plans and specifications APPROVED in accordance with the Building Act 2004, clause 49 and the Building Regulations 1992, Clause 3
170037 13/03/2017 petert

T:\Support Files\Chief Architect V11\New Templates\My Drawing Templates\Gib Details.layout

Consent Issued BC170037

BC170037

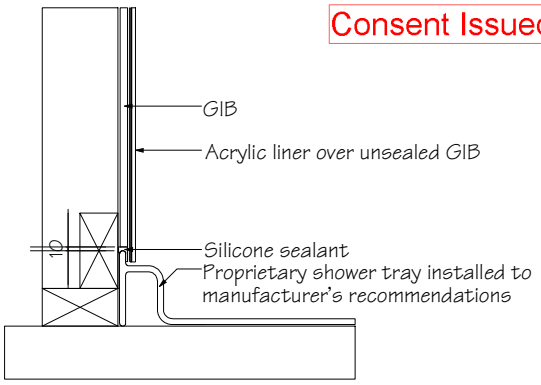

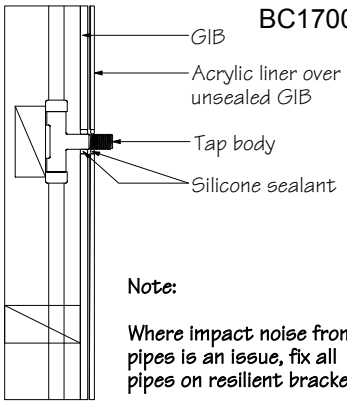

Note:

Where impact noise from pipes is an issue, fix all pipes on resilient brackets.

A — Shower Wall/Tray Detail

Shower - Tiled Walls and Acrylic Base GAW-D024

B — Penetration Detail

Shower - Tiled Walls and Acrylic Base GAW-D023

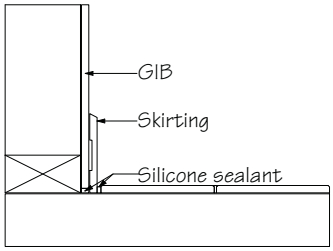

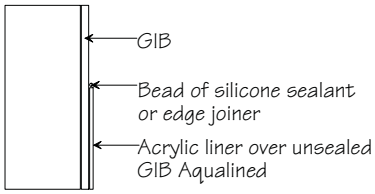

C — Wall/Floor Detail

Shower - Tiled Walls and Acrylic Base GAW-D029

D — Liner Top Detail

Shower - Acrylic Liner and Base GAW-D030

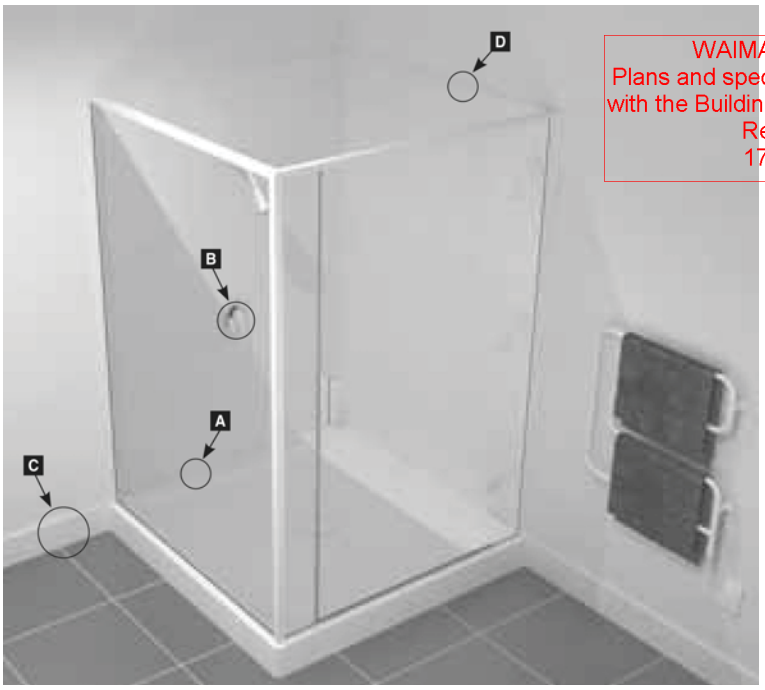

WAIMAKARIRI DISTRICT COUNCIL
Plans and specifications APPROVED in accordance with the Building Act 2004, clause 49 and the Building Regulations 1992, Clause 3
170037 13/03/2017 petert

Note all construction to comply with New Zealand Standards and relevant NZBC clauses

Title: Acrylic Shower			
Drawn. SC	Date 14-08-09	Chk.	Client: Details
Sales · HQ	Plot Date 30/03/2010	Scale @ A4 NTS	
Job Number 00			

T:\Support Files\Chief Architect V11\New Templates\My Drawing Templates\Gib Details.layout

Consent Issued BC170037

BC170037

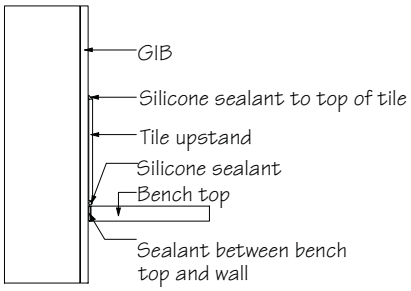

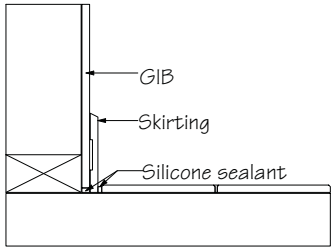

A Bench Top/Wall Detail

Kitchen and Laundry GAW-D031

C Wall/Floor Detail

Kitchen and Laundry

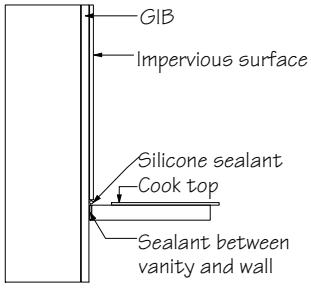

Note:
See Wall Surfaces Surrounding Cooktops on page 7 of Gib wet area systems booklet.

B Cook Top/Wall Detail

Kitchen and Laundry GAW-D032

WAIMAKARIRI DISTRICT COUNCIL
Plans and specifications APPROVED in accordance with the Building Act 2004, clause 49 and the Building Regulations 1992, Clause 3
170037 13/03/2017 petert

Note all construction to comply with New Zealand Standards and relevant NZBC clauses

Title	Kitchen & Laundry		
Drawn. SC	Date 14-08-09	Chk.	Client Details
Sales HQ	Plot Date 30/03/2010	Scale @ A4 NTS	
Job Number 00			

T:\Support Files\Chief Architect V11\New Templates\My Drawing Templates\Gib Details.layout

Wet-seal Fibre Coat

Consent Issued BC170037

BC170037

Internal Wet Areas

Description

Wet-seal Fibre Coat is a two coat fibreglass re-inforced polyester resin based waterproofing membrane system and is coloured in the Wet-seal Corporate Jade Green. When cured it is a seamless membrane and will not bleed through porous materials. It is specifically designed for **INTERNAL USE** on Concrete Slab, Cement Render, Concrete and Masonary Walls, Compressed Fibre-cement Flooring, Fibre-cement Flooring Overlay, Fibre-cement Wall Lining, Water Resistant Plasterboard, Wall Lining Plywood Flooring and Particleboard Flooring, preceding Tiles.

Application

Wet-seal Fibre Coat is for internal waterproofing areas such as Showers, Bathrooms, Ensuites, Powder Rooms and Laundries. This highly specified system is supply and fix and is only installed by Wet-seal New Zealand's nationwide network of fully trained Franchisees; in accordance with the Wet-seal Installation Manual.

Surface preparation

Fall should be incorporated in the original concrete slab pour where possible. Allow concrete to cure for 28 days and cement render to cure for 7 days prior to application of the Wet-seal Fibre Coat. The plumbing and wall sheets must be installed prior to the application of the Wet-seal Fibre Coat. Drainage flanges are recommended to be installed on suspended floors prior to application of the membrane. Surfaces must be clean, completely dry and without any trace of residue or permanent dampness. All grease, oil, wax, curing compounds, dust, droppings, loose material, paint and any other contaminants must be removed. Fibrous cement sheeting, plasterboard, particleboard and all suitable flooring substrates must be fixed in accordance to manufacturers' specifications. Hobs (if applicable) must be constructed from masonry, concrete or similar material.

Curing time

Minimum of 24 hours at 23°C/55%RH but in cooler conditions 48 hours.

Tiling direct or tiling mortar bed covering

This may be carried out after the Wet-seal Fibre Coat has been allowed to dry.

Please Note: If a hob is used in the shower ensure that hob tiles are grouted with a flexible grout.

Tile adhesive

WIPE OVER the Wet-seal Membrane thoroughly with clean water **PRIOR** to application of recommended adhesives that meet the requirements of AS4992.

Limitations

Wet-seal Fibre Coat membrane is not designed to be used as a decorative finish.

Guarantee

Wet-seal Fibre Coat carries a fifteen (15) year material and workmanship guarantee.

The system when fully cured has

- ✓ Uniformity of thickness
- ✓ Tenacious bond strength
- ✓ Excellent chemical resistance, and;
- ✓ Is free of pitch and does not bleed through porous materials

WAIMAKARIRI DISTRICT COUNCIL
Plans and specifications APPROVED in accordance with the Building Act 2004, clause 49 and the Building Regulations 1992, Clause 3
170037 13/03/2017 petert

Physical description and properties

Mass per unit area:	1066 ± 22gm-^{2}	AS 2324	Appendix D
Water absorption:	(%) - 0.40 ± 0.05	AS A121	Appendix K
Mean tensile strength:	45.5 MPA	Std. Dev. 4.9	AS 1145
Loss of volatiles (% volume):	(%) - 0.55 ± 0.01	AS A121	Appendix J
Alkali resistance:	No evidence of degradation	ASTM.D543	1978

Performance properties

Colour:	Wet-seal Jade	Appearance:	Smooth
Cure:	24 hours @ 23°C/55% RH	Specific gravity:	0.95 - 1.15 approximately
Flammability:	Flammable	Application of trafficable products:	48 hours

Precaution

- ✗ This is not a vapour barrier
- ✗ Must not be applied to any contaminated surface
- ✗ This membrane is not designed to stop hydrostatic headwater pressure
- ✗ Must not be applied to a surface with a temperature of less than + 7°C

Health and Safety

The Franchised applicator must comply with the Wet-seal Health & Safety Manual.

Wet-seal Fibre Coat

Consent Issued BC170037

BC170037

Internal Wet Area Details for Wet-seal Waterproofing System

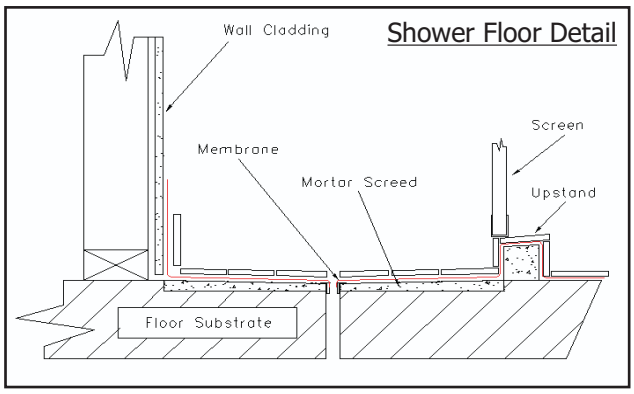

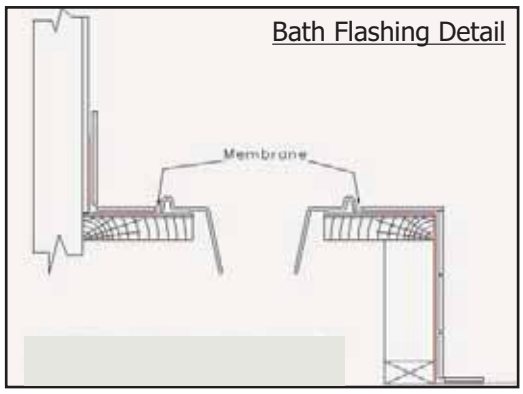

The Wet-seal Fibre Coat System is used for all internal wet areas.

It carries a Branz Appraisal 372 (2000). It has completed the CSIRO requirements, Test No. 3392 (Feb 06), to meet the requirements of AS/NZ 4858 Wet Area Membranes.

Shower base to be constructed with a fall to the waste to prevent ponding as per E3/AS1

Suitable substrate materials are Concrete, H3 Plywood, Particleboard flooring and Fibrous Cement Sheet.

The recommended waste flange is the Allproof Tile Waste, this allows the membrane to return down the waste and provide sub-tile draining.

Shower floors can be constructed with or without upstands. When required they shall be of non porous material and installed by Wet-seal.

When enclosures such as walls, screens, doors or curtains are used they shall be continuous from floor level or top of upstand to a height of 1800mm minimum above floor and not less than 300mm above the shower rose, refer E3/AS1.

Where the shower floor has no upstand or where a wall, screen, door or curtain is omitted, the floor shall have a fall of no less than 1:50 towards the floor waste. The fall shall apply to the floor area within a radius of 1500mm taken from a point vertically below the shower rose, and from any wall within that radius.

The Wet-seal waterproof membrane must be fully dry before any Under Floor Heating is applied. This should only be carried out as per the manufacturer's recommendations.

If the substrate is strip flooring, fibrous cement sheet underlay will need to be installed prior to the Wet-seal membrane. However if the substrate is timber sheet flooring there is no requirement to apply the fibrous cement underlay.

BRANZ Good Tiling Practice recommends laying the mortar screed prior to the application of a waterproof membrane to prevent it retaining moisture and inducing mould. This is only possible if the membrane is able to return down the waste, ie; Allproof Waste.

Wet-seal New Zealand recommend that on concrete substrates all wall/floor junctions are flashed within the room and on timber or fibrous cement sheet flooring the entire floor is to be sealed with the Wet-seal membrane.

In cases where a door is in close proximity to the shower Wet-seal New Zealand will install an aluminium angle in the doorway to prevent water migrating from the room.

Prior to the Wet-seal application the area must be dry and clean with all surface plaster droppings removed.

After tiling is completed, the shower screen should be fitted on the inside edge of the upstand, as shown.

Wet-seal Pyure Coat 400

Consent Issued BC170037

BC170037

External Wet Areas

Description

Wet-seal Pyure Coat 400 is a one component, highly elastic, moisture curing polyurethane coating and is coloured in the Wet-seal Corporate Jade Green.

Application

Wet-seal Pyure Coat 400 can be applied as an elastic coating for balconies and terraces, a waterproof membrane or coating for pedestrian bridges and stairways, roofs, decks and balconies. Wet-seal Pyure Coat 400 must be over coated with a UV stable coating i.e. Tiles, UV paint, Slatted deck or UV stable paint. This highly specified system is supply and fix and is only installed by Wet-seal New Zealand's nationwide network of fully trained Franchisees; in accordance with the Wet-seal Installation Manual.

Advantages

- ✓ Excellent mechanical resistance
- ✓ Versatile - can be used for a flexible coating and as a waterproof membrane
- ✓ Good crack bridging ability
- ✓ Excellent thermal resistance
- ✓ Can be tiled over
- ✓ Water potable

Surface preparation

Suitable substrate materials are concrete, 17mm (min) CD plywood and fibrous cement sheet. All areas should be clean and dry prior to membrane application and applied in accordance with the manufacturers' specifications.

Surfaces must be clean and free from all traces of loose materials, old coatings, curing membranes, release agents, laitance, oil and greases, etc.

Substrate compressive strength should be at least 25MPa, cohesive bond strength at least 1.5MPa.

Structurally unsound layers and surface contaminants must be mechanically removed by abrasive blast tracking or grinding. Substrates heavily impregnated with oil must be cleaned by torching or suitable solvent cleaning methods.

To check that all traces of oil have been completely removed, sprinkle a few drops of water over the surface. If all the water is quickly absorbed, the surface is sufficiently oil and grease free. If the water forms into globules that remain on the surface, further thorough treatment of surface is necessary.

Wet-seal Pyure Coat 400 acts as a self-levelling coating and will not re-profile irregular substrates. For re-profiling defects on horizontal surfaces a suitable patching mortar is required. The patching mortar can be of epoxy, polyester or cementitious base depending on the scope, particular conditions and requirements of the work.

Tiling direct or tiling mortar bed covering

This may be carried out after the Wet-seal Pyure Coat has been cured for a minimum of 7 days.

Please Note: If using sand/cement mortar bed over Wet-seal Pyure Coat 400 a minimum thickness of 40mm is required.

Guarantee

Wet-seal Pyure Coat 400 carries a fifteen (15) year material and workmanship guarantee.

Technical and Physical Data

Form:	Liquid polyurethane
Density:	1.6kg/litre (DIN 53 217)
Solids content:	88%
Elongation at break:	320% (DIN 53 504 - after 7 days curing at 23°C / 50% RH)
Shore hardness:	Shore D45 (DIN 53 505 - after 7 days curing at 23°C / 50% RH)

Health and Safety

The Franchised applicator must comply with the Wet-seal Health & Safety Manual.

THERMAL INSULATION

Pitched Roof: Roof Underlay and Insulation Clearance

Option 2: Trim Product

The table below details the trimming required of the Pink® Batts® ceiling product located at the perimeter of the roof space.

Option 2: Trim Product

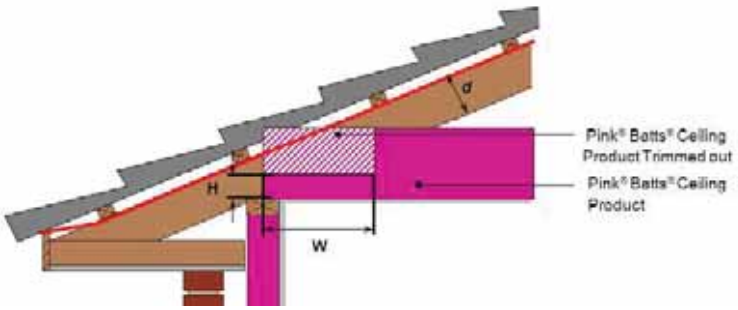

Pink® Batts® Ceiling Product			R 5.0	R 4.6	R 4.0	R 3.6	R 3.2	R 2.6	R 2.2	R 1.8
Pink® Batts® Ceiling Product Nominal Thickness (mm)			200	195	190	180	170	140	115	95
Pitch θº	d (mm)	H (mm)	(mm)							
15	90	80	447	428	410	372	335	223	130	55
	140	132	254	235	216	179	142	30		
	190	184	61	42	23					
	240	No trimming required, product can be installed to the middle of the top plate and maintain a 25mm clearance								
	290									
20	90	87	310	296	283	255	228	145	77	22
	140	140	164	150	136	109	81			
	190	194	18	4						
	240	No trimming required, product can be installed to the middle of the top plate and maintain a 25mm clearance								
	290									
25	90	95	225	214	203	182	160	96	42	
	140	150	106	96	85	63	42			
	190	No trimming required, product can be installed to the middle of the top plate and maintain a 25mm clearance								
	240									
	290									
30	90	105	165	156	147	130	113	61	17	
	140	163	65	56	47	30	13			
	190	No trimming required, product can be installed to the middle of the top plate and maintain a 25mm clearance								
	240									
	290									

Note: This table is a guide only. The roof construction of each house may vary and the design should be checked on site to ensure the table is applicable.

TECHNICAL UPDATE

www.pinkbatts.co.nz
This data sheet may have been superseded. Please refer to www.pinkbatts.co.nz or call 0800 PINK BATTS (746 522) for the most current information

Consent Issued BC170037

BC170037

Providing THE SYSTEM THAT MATTERS

AUGUST 2008

BRANZ Appraised
Appraisal No. 614 [2008]

WAIMAKARIRI DISTRICT COUNCIL
Plans and specifications APPROVED in accordance with the Building Act 2004, clause 49 and the Building Regulations 1992, Clause 3
170037 13/03/2017 petert

ALUBAND™ / ALUMINUM

Window Sealing System NCT

The **Thermakraft WINDOW SEALING SYSTEM**

The Window Sealing Tape

The Corner Moulded Piece

. . . with the Aluband Tool

Thermakraft Industries (NZ) Ltd

NCT • New Composite Technology

THE SYSTEM • THE METHOD Installation Guide

Original Issued 30/12/2003

1 Cut the building wrap/air barrier at 45° away from each corner *(left pic)*, fold flaps tightly into the window or door opening and fix with staples on the back faces of the framing *(right pic)*.
Trim excess building wrap/air barrier to enable unimpeded access to the opening.

2 Fix the **Thermakraft ALUBAND™ Corner Moulded Piece™** (orange in colour) to the sill corners by way of staples or clouts to the two jambs as shown. The flexibility of the corner piece allows for a 5° chamfer (slope) on the timber sill where it is required for direct fix cladding. Now install the **Thermakraft ALUBAND™/ALUMINIUM Window Sealing Tape** as in step 3. 150mm wide tape is used for 100mm wide window or door framing. 200mm wide tape is used for 140mm to 150mm wide reveals. With steel framed houses use Double Sided Tape to attach **Thermakraft ALUBAND™ Corner Moulded Piece™** to metal cladding.

Do not fix through the logo on the **Thermakraft ALUBAND™ Corner Moulded Piece™**

3 Measure 200mm up both jambs *(left pic)*, add 400mm to the length of the window sill and cut the **Thermakraft ALUBAND™/ALUMINIUM Window Sealing Tape** to suit that measurement *(right pic)*.

4 Remove first the polyethylene protective film from the **Thermakraft ALUBAND™/ALUMINIUM Window Sealing Tape;** align the back edge of the **Thermakraft ALUBAND™/ALUMINIUM Window Sealing Tape** with the inside edge of sill.

Do not lay **Thermakraft ALUBAND™/ALUMINIUM Window Sealing Tape** onto the interior surface of framing where it may interfere with wall linings.

5 Using the **Thermakraft ALUBAND™ Tool,** firmly press the **Thermakraft ALUBAND™/ALUMINIUM Window Sealing Tape** onto the building wrap/air barrier to ensure good adhesion.
Using the **Thermakraft ALUBAND™ Tool,** ensure that the tape is fitted tightly into the jamb to sill corners.

6 At the sill/jamb corners cut the **Thermakraft ALUBAND™/ALUMINIUM Window Sealing Tape** from the external edge of the frame outwards.
Fold flaps back onto the building wrap/air barrier and press tape firmly for good adhesion.

The **Thermakraft ALUBAND™ Corner Moulded Piece™** is nearly all covered except for the logo showing on the outer bottom edge.

THE SYSTEM • THE METHOD . . . . . Continued

Consent Issued BC170037

7 Proceed to fix the **Thermakraft ALUBAND™/ALUMINIUM Window Sealing Tape** to the top corners of the frame (200mm across lintel x 200mm down jamb). Remove first the backing film from the **Thermakraft ALUBAND™/ALUMINIUM Window Sealing Tape;** align the back edge of the **Thermakraft ALUBAND™/ALUMINIUM Window Sealing Tape** with inside edge of lintel. Using the **Thermakraft ALUBAND™ Tool,** ensure that the tape is fitted tightly into the corners. Cut the **Thermakraft ALUBAND™/ALUMINIUM Window Sealing Tape** from the external edge of the frame outwards. Fold flaps back onto the building wrap/air barrier and press tape firmly for good adhesion.

8 For the window or door lintel to jamb junction, apply a Butterfly using the 50mm wide x 100mm long **Thermakraft ALUBAND™/ALUMINIUM Window Sealing Tape,** and fix at a 45° angle to the jamb with an overlap at the corner of 3mm (as per photo on right).

The **Thermakraft ALUBAND™/ALUMINIUM Window Sealing System** is now complete (as per this photo alongside).

9 Meter boxes with built-in flanges, to be taped with 50mm **Thermakraft ALUBAND™/ALUMINIUM Window Sealing Tape** along each flange to the building wrap/air barrier.

Frame openings for meter boxes without built-in flanges to be treated as for window openings. Refer steps 1-8.

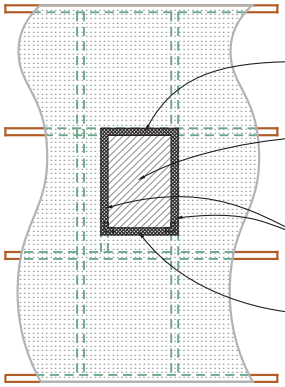

10 50mm **Thermakraft ALUBAND™/ALUMINIUM Window Sealing Tape** is used to seal the up stand of the window head flashing to the building wrap/air barrier. Refer to the cladding manufacturer's details.

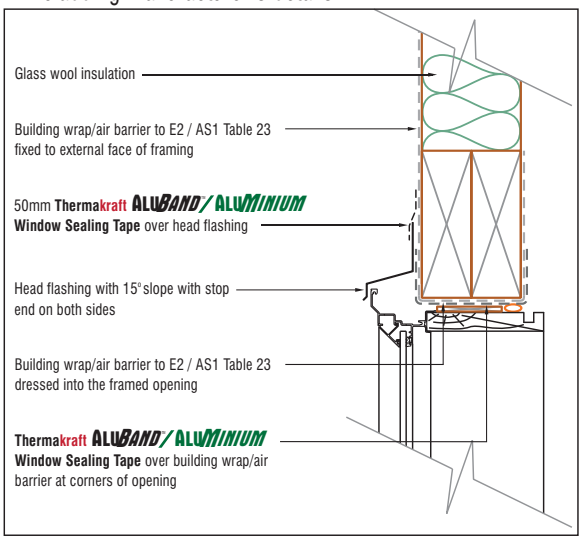

11 Door frames are to be treated similarly to window openings. The sill may be either a timber or a concrete floor.

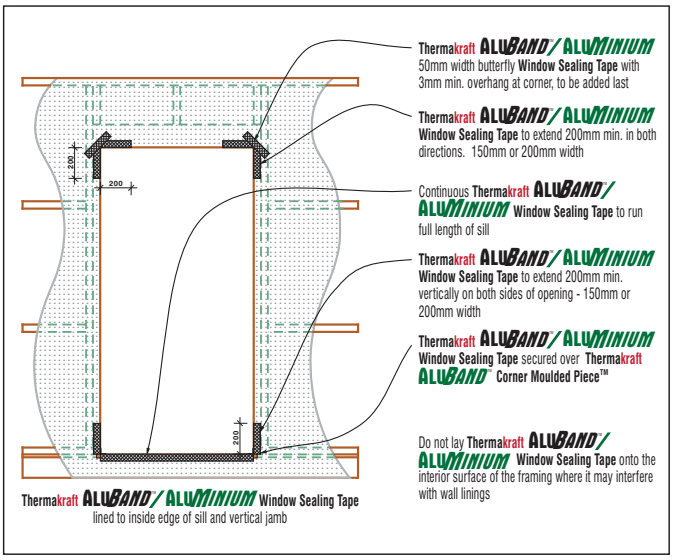

E. & O. E.

Consent Issued BC170037

BC170037

Thermakraft ALUBAND/ALUMINIUM Window Sealing Tape is a polymeric faced high quality bituminous modified self adhesive tape with a polyethylene release backing and comes in 150mm wide, 200mm wide, 75mm wide & 50mm wide tapes.

The **Thermakraft ALUBAND Corner Moulded Piece™** is made from inert orange PE that is used in conjunction with the **Thermakraft ALUBAND/ALUMINIUM Window Sealing Tape** & building wraps, as part of the secondary drainage plane reqd to prevent the ingress of moisture into the framing.

A special **Thermakraft ALUBAND Tool** (green) is used to ensure proper adhesion and a tight fit into corners.

Applications

The **Thermakraft ALUBAND/ALUMINIUM Window Sealing System** is designed to work with all kraft-based building papers that meet the requirements of Table 23 of E2/AS1, and the following synthetic wall underlays: Cover-Up, Diflex 130, Watergate, Tekton, Tyvek Home Wrap and Frameguard G3.

Thermakraft ALUBAND/ALUMINIUM Window Sealing System (the System) is specially designed to provide a sure and lasting moisture proof seal at window and door openings.

Thermakraft ALUBAND/ALUMINIUM Window Sealing System is ideal for sealing head flashings to the building wrap/air barrier as well as around meter boxes with built-in sealed flanges.

The system provides a moisture barrier at the most vulnerable point at the sill/jamb and jamb/lintel intersection.

DOOR FRAMES TO BE TREATED EXACTLY THE SAME AS THE WINDOW FRAME *(refer to Step 11 inside).*

Thermakraft ALUBAND/ALUMINIUM Window Sealing Tape can be used on the following timber treatments: CCA, Boron & LOSP*.

*If **Thermakraft ALUBAND/ALUMINIUM Window Sealing Tape** is used in conjunction with LOSP treated timber, the solvent must be allowed to flash off before installation. This can be tested by applying a small strip (approx 100mm x 50mm) to the treated timber for one hour. If the tape does not stick well, then the timber must be allowed to flash off for more time.

The **Thermakraft ALUBAND/ALUMINIUM Window Sealing System** must not be exposed to weather for more than 90 days.

The **Thermakraft ALUBAND Corner Moulded Piece™** is designed to prevent the ingress of moisture at both the left and right hand window jamb to sill junctions. It is easy to install on timber framing using either staples or clouts fixed into the jambs.

The **Thermakraft ALUBAND Corner Moulded Piece™** is flexible allowing for use on sills with a 5° chamfer, required for direct fix cladding systems.

When using **Thermakraft ALUBAND/ALUMINIUM Window Sealing Tape** for jamb/lintel intersections, please ensure a butterfly (100mm x 50mm wide tape) is fixed at 45° angle to the jamb *(refer to Step 8 inside).*

Thermakraft ALUBAND/ALUMINIUM Window Sealing Tape 50mm to be adhered to the head flashing *(refer to Step 10 inside).*

Appraised

Thermakraft ALUBAND/ALUMINIUM Window Sealing System has been appraised in New Zealand by BRANZ, Appraisal No. 614 [2008] - *appraisal available on request.*

Standard Roll Dimensions

Thermakraft ALUBAND/ALUMINIUM Window Sealing Tape is available in the following sizes:

Roll Width	Roll Length	No. per carton
200mm	25.0m	2 rolls
150mm	25.0m	4 rolls
150mm	10.0m	12 rolls
75mm	25.0m	8 rolls
50mm	25.0m	12 rolls

House Pack

3 x 150mm x 25m rolls / 3 x 50mm x 10m rolls / 50 x **Thermakraft ALUBAND Corner Moulded Pieces™** / 1 x **Thermakraft ALUBAND Tool** / 1 x Data Sheet.

The **Thermakraft ALUBAND/ALUMINIUM Window Sealing System** is expected to have a serviceable life equal to that of the cladding, when installed in accordance with this data sheet and the technical literature, provided it is not exposed to the weather or ultra-violet (UV) for a total of more than 90 days, or damaged on installation.

Thermakraft ALUBAND/ALUMINIUM Window Sealing System when used with wall wraps listed in this data sheet and in accordance with this data sheet, will meet the Performance ***B2.3.1 (b) 15 years*** of the New Zealand Building Code.

The **Thermakraft ALUBAND/ALUMINIUM Window Sealing Tape** must not be installed at temperatures of less than 10°C.

This printed material supersedes all those previous. **Thermakraft Industries (NZ) Ltd** retains the right to change products and specifications without prior notification. Do not use **Thermakraft** products in application other than that detailed in the product brochure, data sheets, relevant Standards, Codes of Practice, Building Legislation and/or Health & Safety Regulations, without obtaining written advice from **Thermakraft Industries (NZ) Ltd**. All product dimensions and performance claims are subject to any variation caused by normal manufacturing process and tolerances. This information is provided without prejudice by **Thermakraft Industries (NZ) Ltd**.

Thermakraft Industries (NZ) Ltd

11 Turin Place, East Tamaki, Auckland, New Zealand
P.O. Box 58-112, Greenmount, Auckland, NZ
Freephone: 0800-806 595 Phone: 09-273 3727 Fax: 09-273 3726
Email: sales@thermakraft.co.nz Website: www.thermakraft.co.nz

E. & O. E.

Consent Issued BC170037

LUMBERLOK®

BOTTOM PLATE FIXING ANCHOR

- ★ Eliminates the drilling of bottom plates
- ★ Makes the fixing of timber framework easier and quicker
- ★ Saves hand trowelling around cast-in anchor bolts or rods
- ★ Use at 900mm centres max.
- ★ Complies with Clause 7.5.12.2 NZS 3604:2011

Fig.1

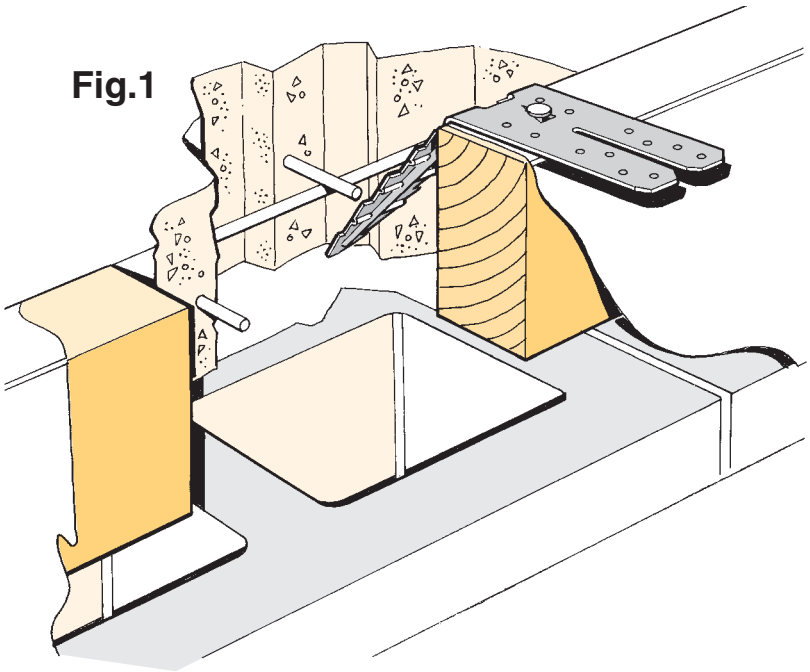

1. Bottom Plate Fixing Anchors shall be fixed at 900mm centres max. to the boxing for concrete floor slabs, over a continuous vapour barrier.
   Each Fixing Anchor is nailed prior to concrete pour, and shall be left undisturbed until concrete has hardened ready for timber frames to be installed. (Fig.1).
2. When timber framing is in place, the Fixing Anchors are folded up and over the bottom plate. (Fig. 2).
3. Two LUMBERLOK Product Nails 30mm x 3.15 dia. shall then be driven into the side of the bottom plate and two additional nails applied through each of the lugs. Should a stud coincide with the position of a Fixing Anchor, nail as shown in Fig. 3.
4. A 75mm x 4 dia. concrete nail must be fixed adjacent to each Fixing Anchor, through the bottom plate into the concrete, at no less than 70mm from the concrete edge. When used as a Bracing Wall hold-down, a Fixing Anchor must be positioned within 150mm from the end of that wall. Bracing wall must not exceed 70 BU/m.

Fig. 3

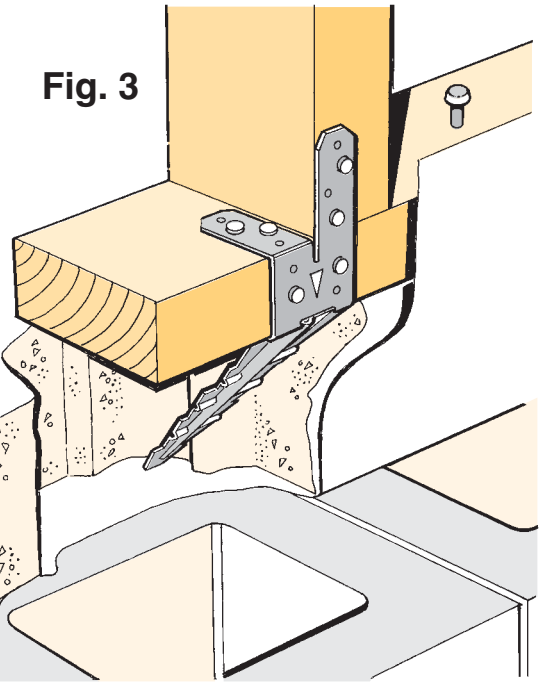

Fig. 2

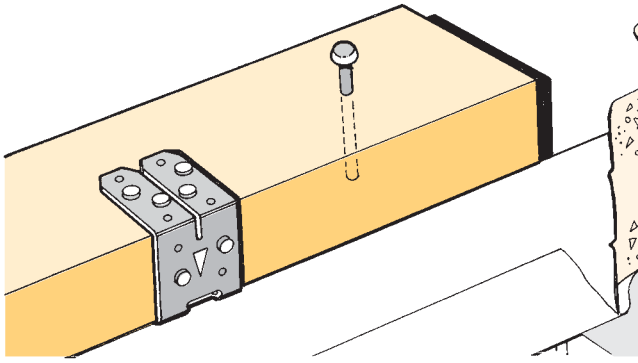

Available from leading Builders Supply Merchants throughout New Zealand

MiTek®

© Copyright 2011 MiTek Holdings, Inc.
All rights reserved.

Consent Issued BC170037

LUMBERLOK®

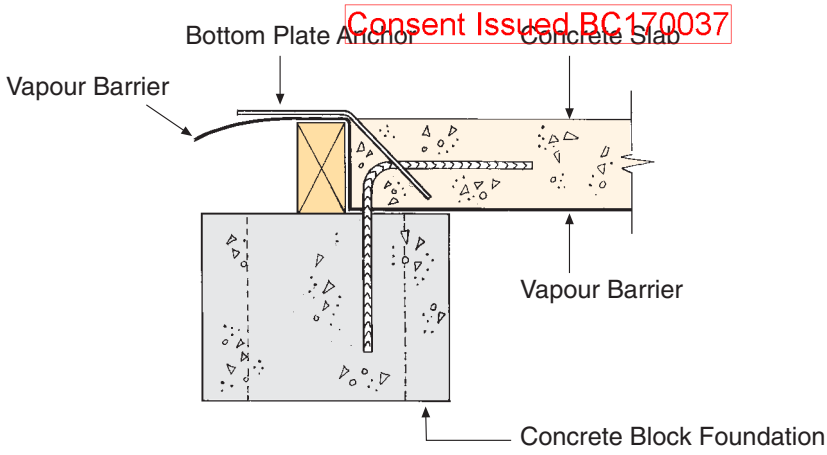

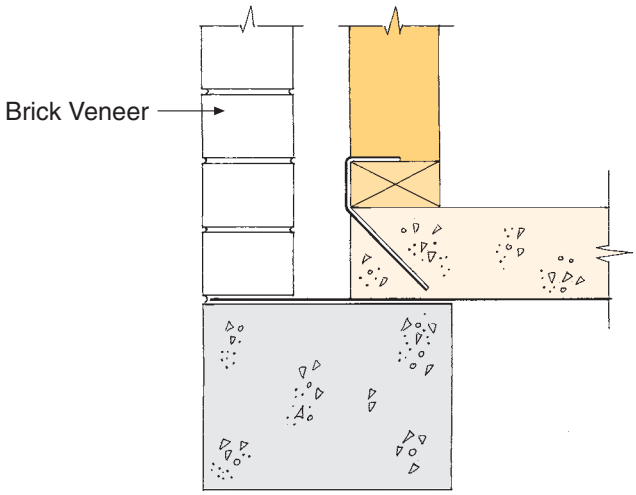

BRICK VENEER

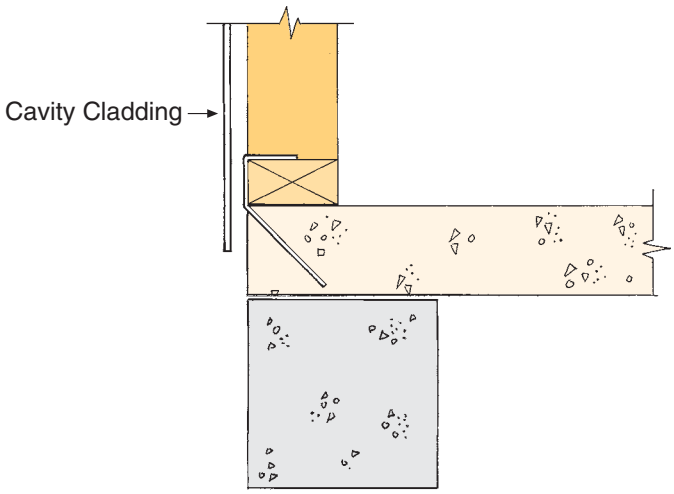

CAVITY CLADDING

Code: BPA
Material: 0.95mm G300 Z450 Galvanised Steel
Code: SSBPA
Material: 0.9mm Stainless Steel 304-2B
Packaged: 50 per carton

Design Loads
Concrete compressive strength 20 MPa min.

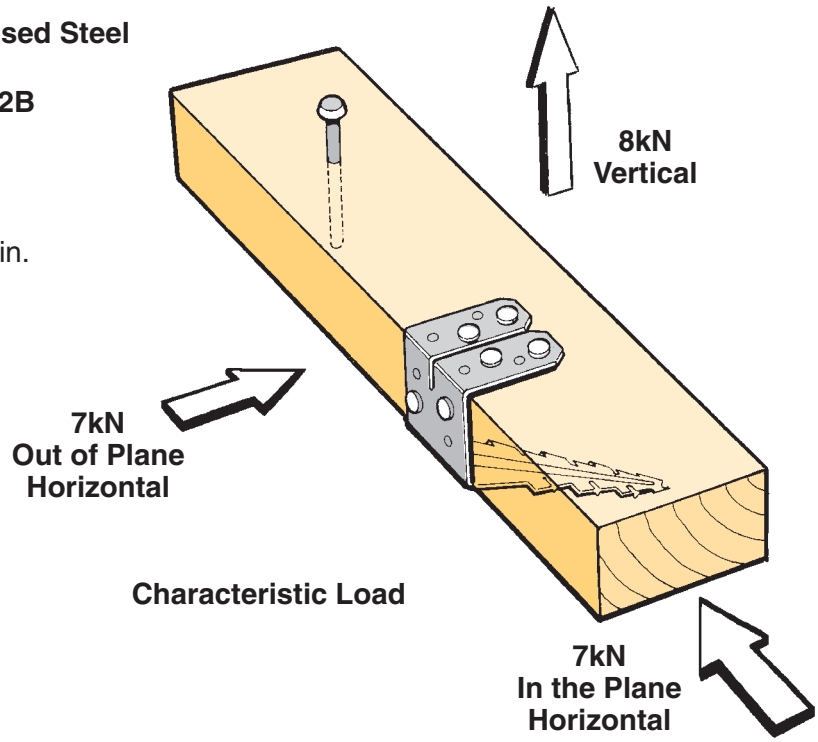

MiTek New Zealand Limited

MiTek®
GANG-NAIL® LUMBERLOK® BOWMAC®

AUCKLAND
PO Box 58-014, Botany 2163
Phone: 09-274 7109
Fax: 09-274 7100

CHRISTCHURCH
PO Box 8387, Riccarton 8440
Phone: 03-348 8691
Fax: 03-348 0314

www.miteknz.co.nz

© Copyright 2011 MiTek Holdings, Inc.
All rights reserved.

DURABILITY FLOW CHART

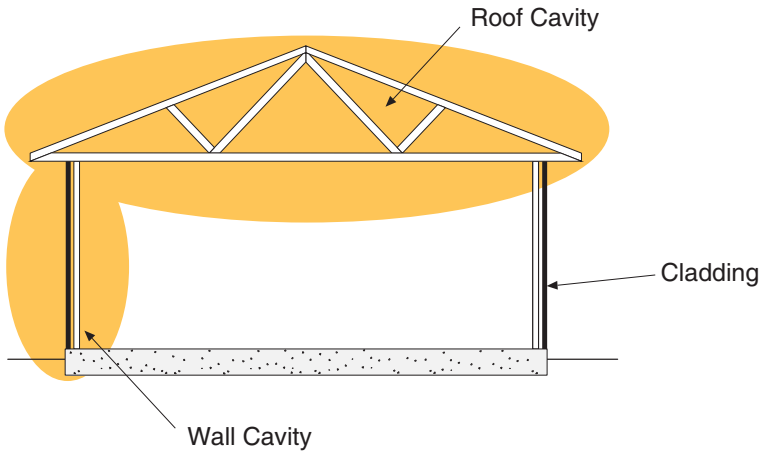

CLOSED

Dry, internal location, not subject to airborne salts or rain wetting.

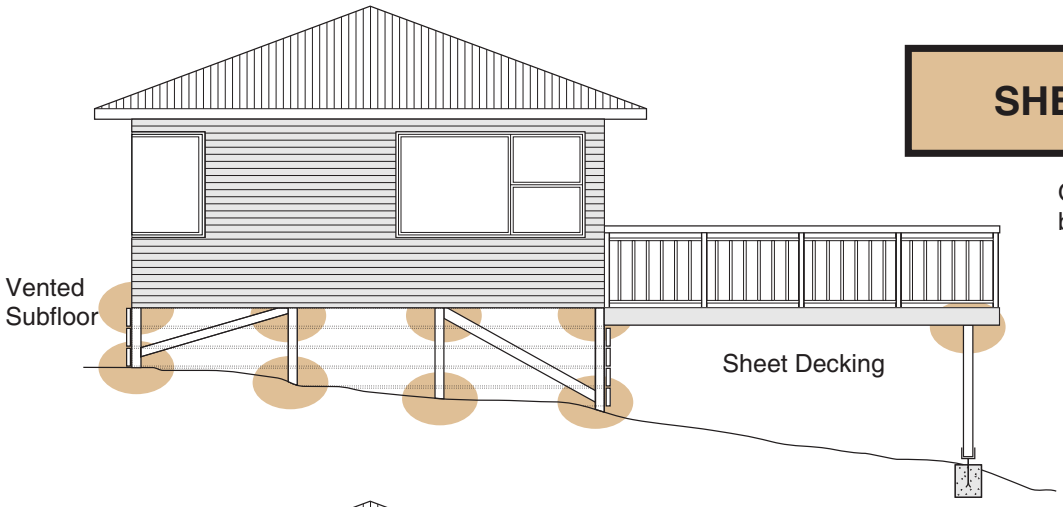

SHELTERED

Open to airborne salts, but not rain washed.

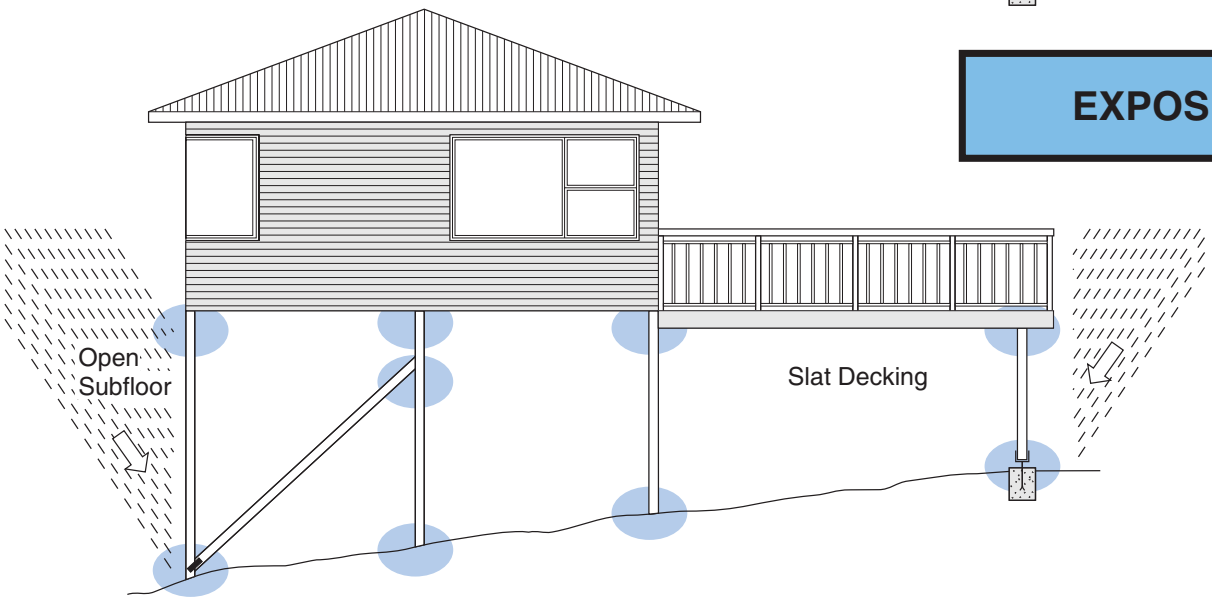

EXPOSED

Open to airborne salts and rain washed.

© Copyright 2011 MiTek Holdings, Inc.
All rights reserved.

DURABILITY FLOW CHART

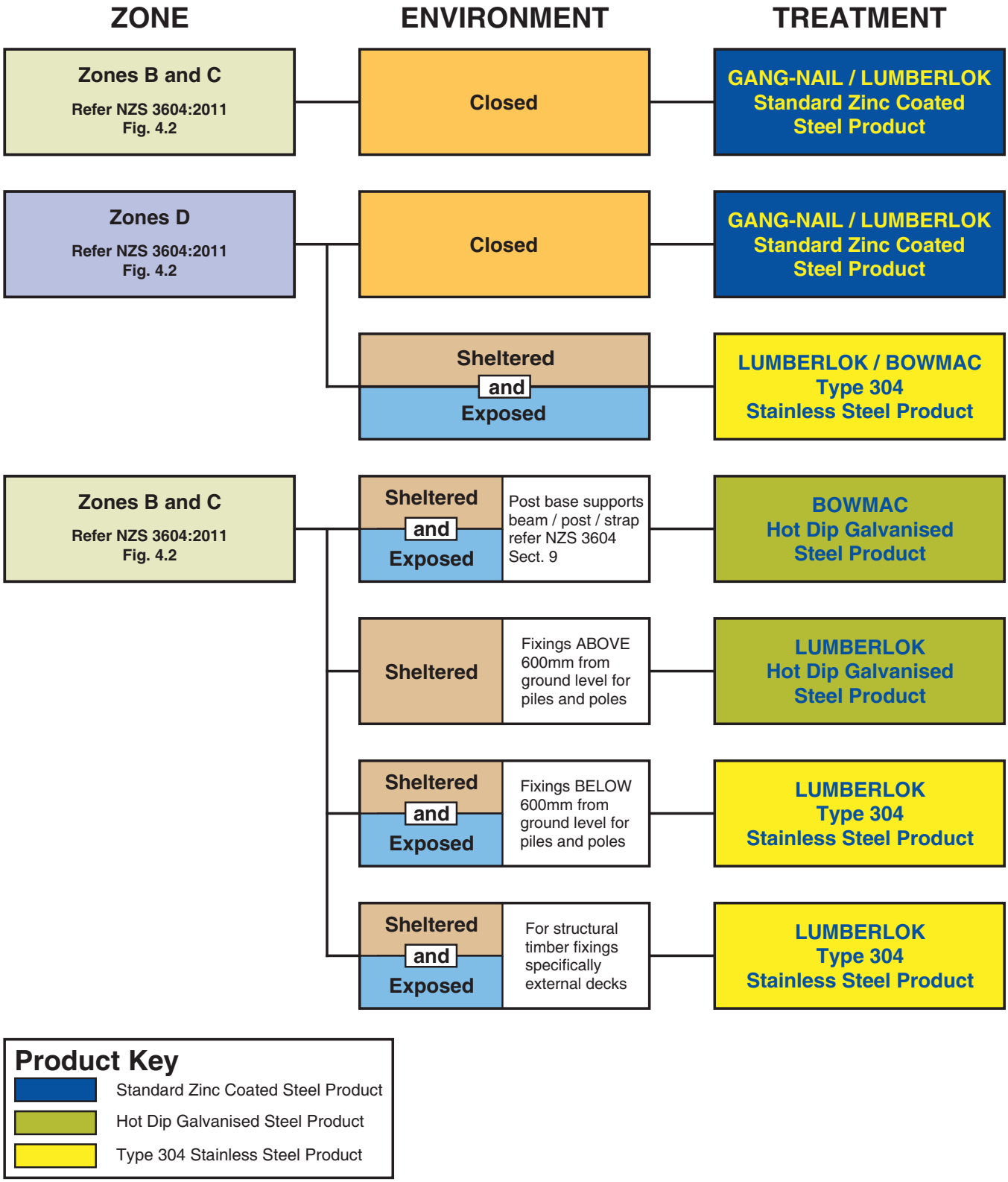

Product Key

- Standard Zinc Coated Steel Product
- Hot Dip Galvanised Steel Product
- Type 304 Stainless Steel Product

© Copyright 2011 MiTek Holdings, Inc.
All rights reserved.

Consent Issued BC170037

BC170037

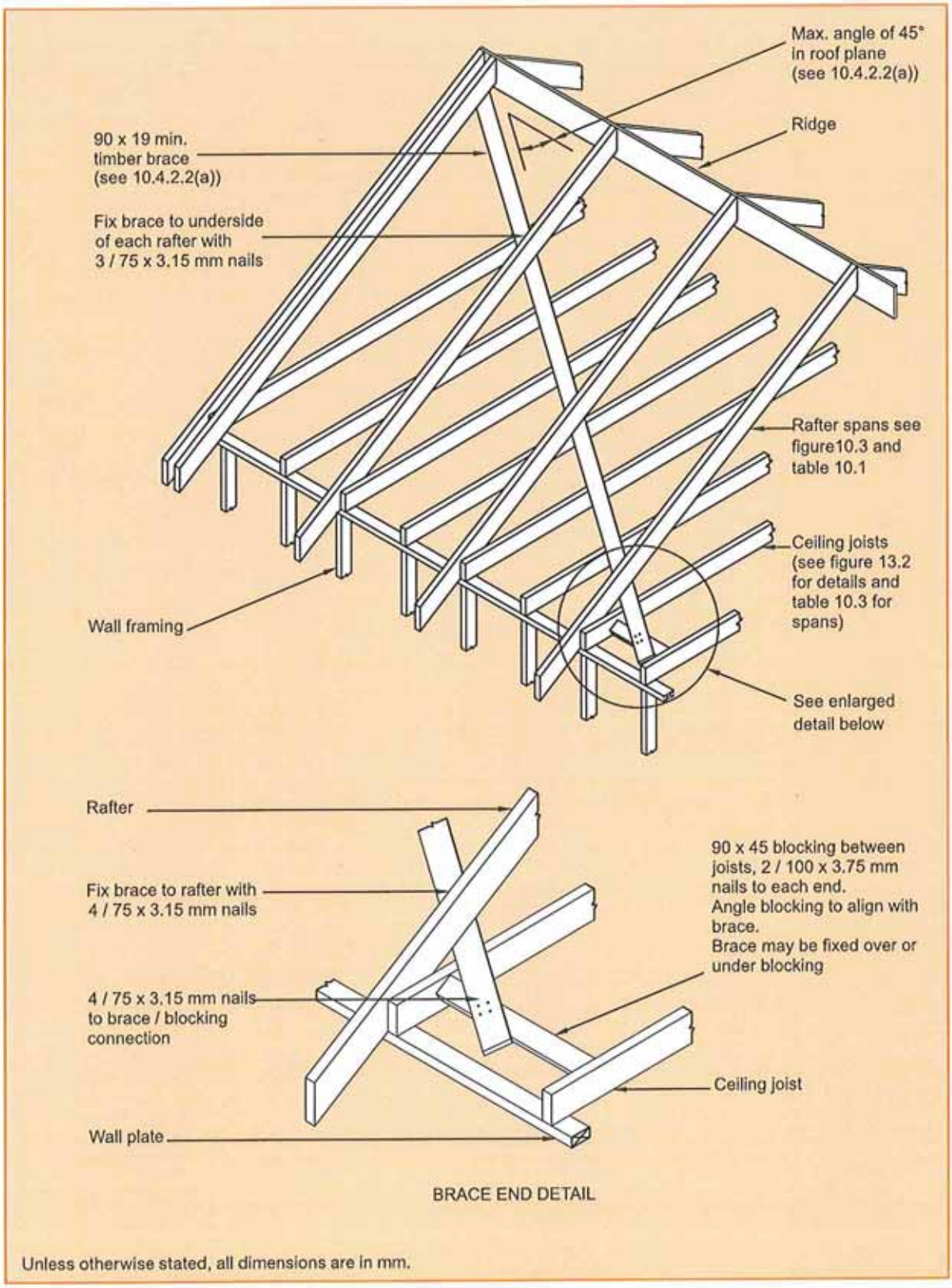

Figure 10.22 – Roof plane diagonal brace – Timber (see 10.4.2)

 COPYRIGHT © Standards New Zealand

LUMBERLOK®

Consent Issued BC170037

BC170037

ROOF BRACING SPECIFICATION

AS PER NZS 3604:2011

- ★ Covers roof bracing requirements to resist horizontal loads as set out in NZS 3604:2011 Section 10.
- ★ A definitive guide to the description and installation of Roof Plane Braces and Roof Space Braces.

Roof Bracing Requirements

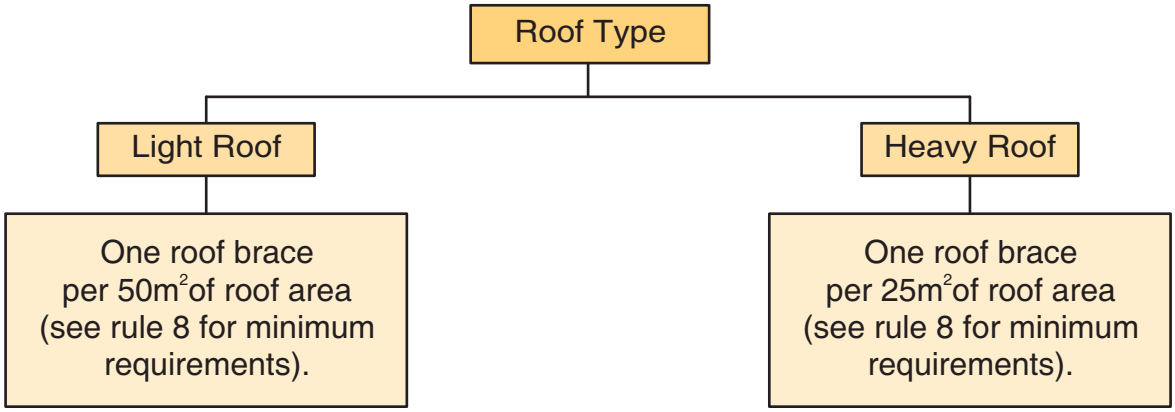

Roof Bracing - Rules & Definitions

1. The bracing described in this brochure covers both framed roofs and fully trussed roofs.
2. Roof planes less than 6m^2 (e.g. dormers & porches) do not require bracing.
3. Roof braces can consist of either i) Roof Plane Brace or ii) Roof Space Brace or combination of the two.
4. Roof braces are not required on roofs where sarking is installed as per NZS 3604:2011 Clause 10.4.4 or where a ceiling diaphragm is installed and is attached to the rafters.
5. Roof area is the actual plan area of the roof and includes overhangs.
6. A hip or valley rafter running continuously from ridge to top plate can be classed as one roof plane brace.
7. A pair of crossed LUMBERLOK Strip Brace (preferred for ease of installation) can be classed as one roof plane brace and shall be installed as detailed in this brochure.
8. There must be at least one roof plane brace in each roof plane. Each ridge line shall have a minimum of two roof braces.
9. Every design effort should be made to distribute the roof braces as evenly as possible over the entire roof area and run alternately in opposite directions.

MiTek®

© Copyright 2011 MiTek Holdings, Inc.
All rights reserved.

Roof Bracing Options

Consent Issued BC170037

BC170037

LUMBERLOK®

i) ROOF PLANE BRACE

Each roof plane brace can be:

- A hip or valley rafter running continuously from ridge to the top plate in accordance with NZS 3604:2011 Clauses 10.2.1.3.2 or 10.2.1.3.3

OR

- A pair of tensioned and crossed LUMBERLOK Strip Brace running continuously from ridge to top plate installed as detailed below.

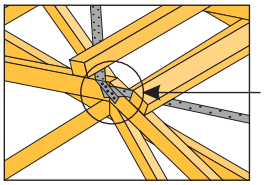

5 x 30mm x 3.15 dia. nails each end

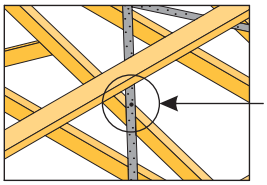

1 x 30mm x 3.15 dia. nail at crossing (after tensioning)

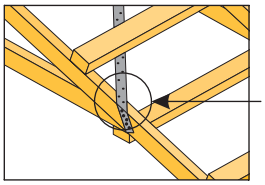

5 x 30mm x 3.15 dia. nails each end

A pair of tensioned and crossed LUMBERLOK Strip Brace over top chords/rafters installed @ 45° ± 5° to the rafter or purlin line.

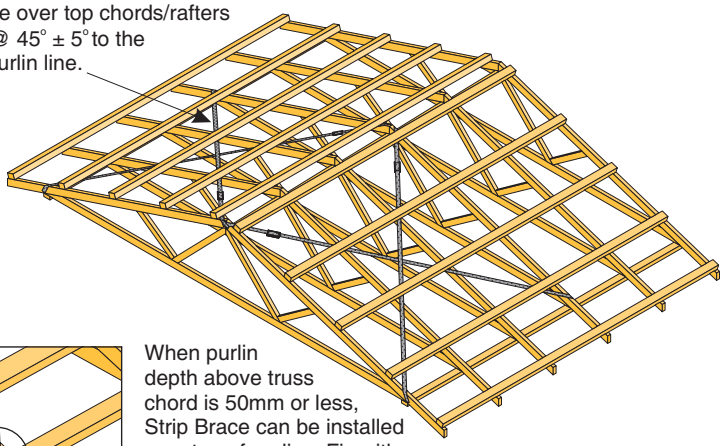

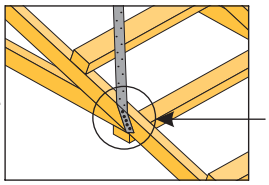

When purlin depth above truss chord is 50mm or less, Strip Brace can be installed over top of purlins. Fix with 1 x 30mm x 3.15 dia. nail at the purlin closest to the rafter/truss crossing.

ii) ROOF SPACE BRACE

(A) Less than 2m long.

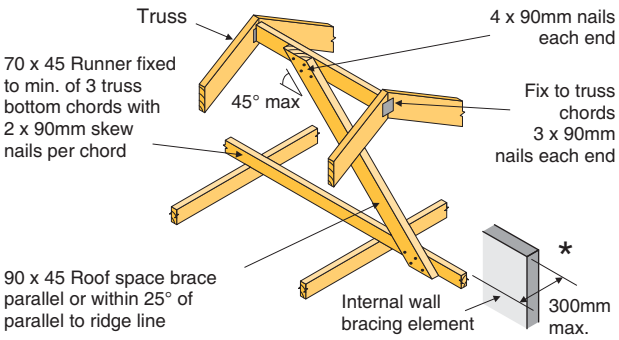

(C) Not directly under the ridge - less than 2m long.

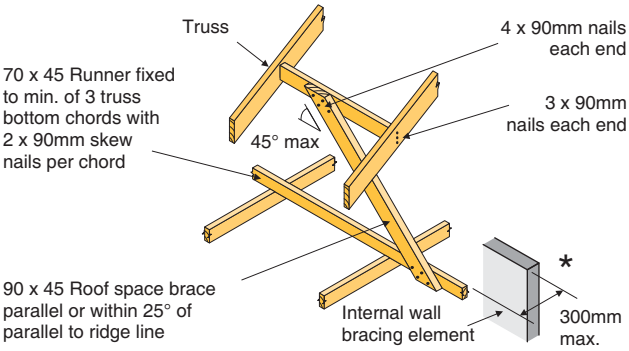

(B) More than 2m long (Max. 4.8m).

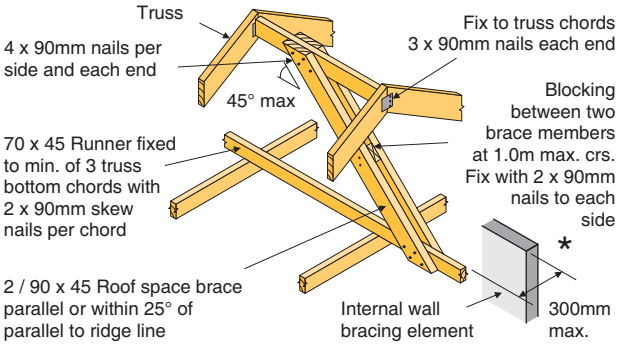

(D) Not directly under the ridge - more than 2m long.

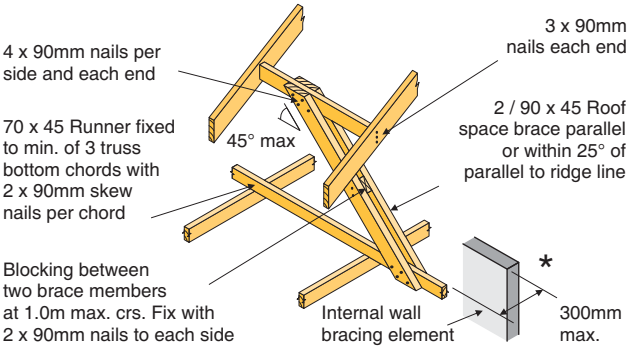

* Not required when a ceiling diaphragm complying with Clause 13.5 of NZS 3604:2011 is used.

MiTek New Zealand Limited

MiTek®

GANG-NAIL® LUMBERLOK® BOWMAC®

AUCKLAND
PO Box 58-014, Botany 2163
Phone: 09-274 7109
Fax: 09-274 7100

CHRISTCHURCH
PO Box 8387, Riccarton 8440
Phone: 03-348 8691
Fax: 03-348 0314

www.miteknz.co.nz

© Copyright 2011 MiTek Holdings, Inc.
All rights reserved.

Consent Issued BC170037

BC170037

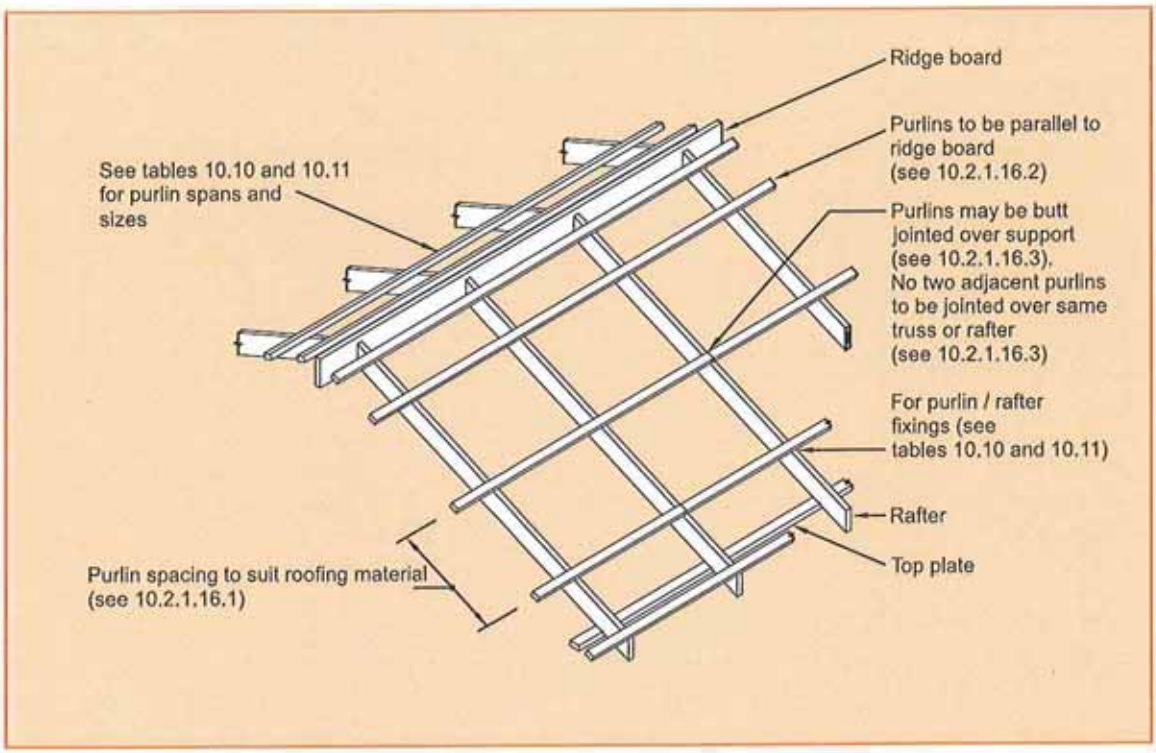

 COPYRIGHT © Standards New Zealand

Consent Issued BC170037

BC170037

Table 10.12 – Tile battens for all wind zones (see 10.2.1.16.7)

Tile batten size	Max. span	Maximum spacing and fixing in the following wind zones									
		Low		Medium		High		Very high		Extra high	
		Spacing	Fixing	Spacing	Fixing	Spacing	Fixing	Spacing	Fixing	Spacing	Fixing
(mm)		(mm)		(mm)		(mm)		(mm)		(mm)	
Light roof cladding											
50 x 40	900	370	R	370	R	370	S	370	S	370	T
50 x 50	1200	370	R	370	S	370	T	370	T	370	T
Heavy roof cladding											
50 x 25	480	370	R	370	R	370	R	370	R	370	R
50 x 40	600	370	R	370	R	370	R	370	R	370	R
50 x 50	900	370	R	370	R	370	R	370	R	370	R

Fixing type	Description	Alternative fixing capacity (kN)
R	1 / 90 x 3.15 gun nail	0.55
S	2 / 90 x 3.15 gun nails	0.8
T	1 / 10g self-drilling screw, 80 mm long	2.4

10.2.1.17 Dummy rafters

10.2.1.17.1

Dummy *rafters* may be laid over sheet *sarking* or ceiling *lining* material which is a maximum of 20 mm thick (see figure 10.20).

10.2.1.17.2

Purlin to dummy *rafter* and dummy *rafter* to *rafter* fixings shall be as given by table 10.13 and figures 10.19 and 10.20.

*On 08/02/2012 11:01 AM Stonewood Homes Ltd purchased a single use licence to store this document on a single computer. Stonewood Homes Ltd may print and retain one copy only.

 COPYRIGHT © Standards New Zealand

LUMBERLOK TRUSS FIXING CHART

BC170037

RAFTER TRUSS TO TOP PLATE FIXINGS

(All WIRE DOG & CT200 fixings are into the top plate **NOT** the packer)

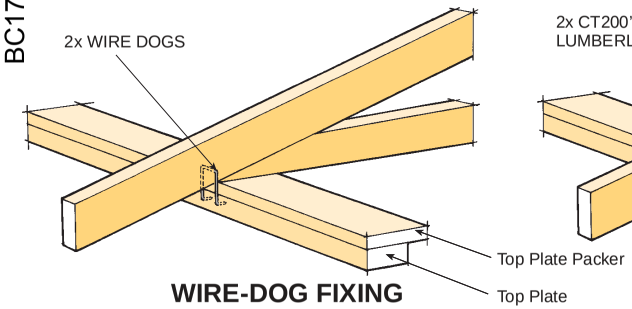

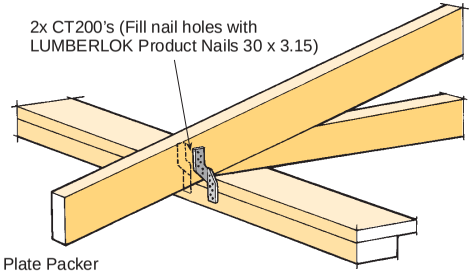

WIRE-DOG FIXING

LOAD DETAILS

Truss Span	3000 - 10000 Low to Medium Wind 3000 - 5000 High to Very High Wind
Roof Weight	Heavy or Light
Truss Centres	900 max.
Snow Load	to 1.0 kPa

CT200 FIXING

LOAD DETAILS

Truss Span	6000 - 15000
Wind	Low to Very High
Roof Weight	Heavy or Light
Truss Centres	900 max.
Snow Load	to 1.0 kPa

GIRDER TRUSS TO TOP PLATE FIXING

All girder trusses up to a span of 9000 and the above load details are to be fixed to the top plate using the CT200 FIXING shown above

Consent Issued BC170037

JACK TRUSS FIXINGS

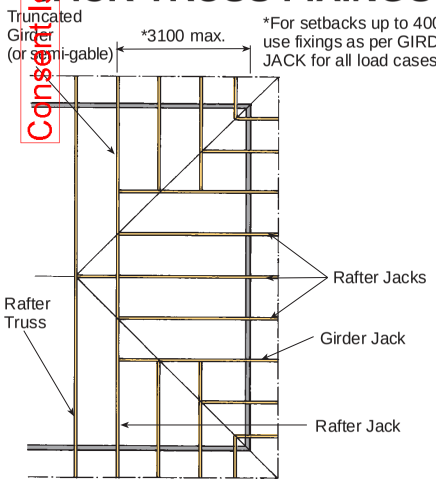

*For setbacks up to 4000, use fixings as per GIRDER JACK for all load cases.

LOAD DETAILS

Truss Span	3100
Max. Wind	High
Roof Weight	Heavy or Light
Truss Centres	900 max.
Snow Load	to 1.0 kPa

*For Very High Wind, fix rafter jack as per GIRDER JACK

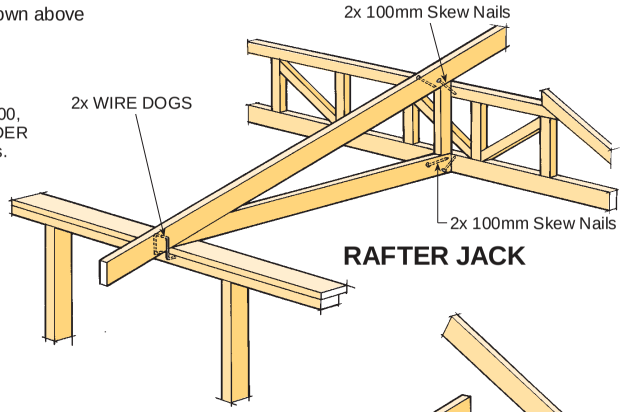

RAFTER JACK

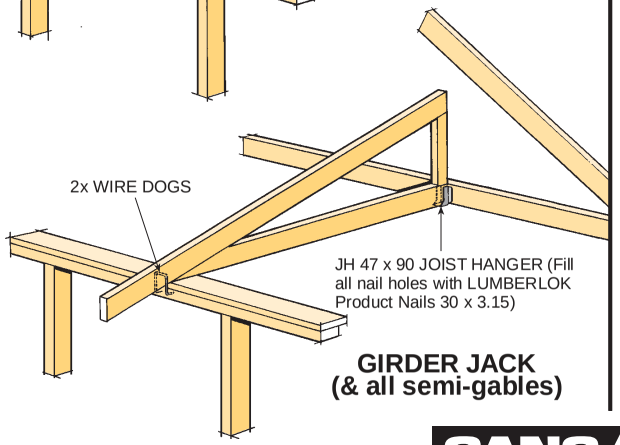

GIRDER JACK (& all semi-gables)

RAFTER TRUSS TO TRUSS FIXINGS

1. RIGHT ANGLE JOINTS

SINGLE COMPONENT TRUSS

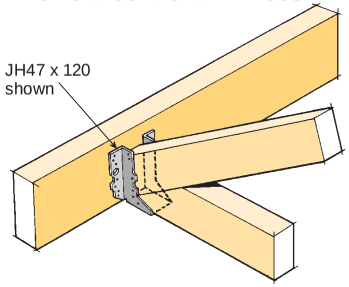

DOUBLE COMPONENT TRUSS

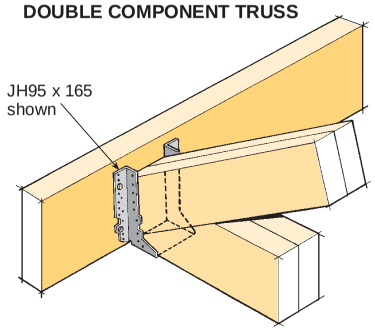

LOAD DETAILS
SINGLE & DOUBLE COMPONENT TRUSS

Wind	Low to Very High
Roof Weight	Heavy or Light
Truss Centres	900 max.
Snow Load	up to 1.0 kPa
Max. Supported Truss Span	12000

Joist Hanger Size Single Component Truss
JH 47 x 120 on Girder Bottom Chords up to **150 x 50** deep
JH 47 x 190 on Girder Bottom Chords of **200 x 50** deep and above
In all cases the max. area of roof supported (ie. setback x supported truss span) not to exceed 48m²
Joist Hanger Size Double Component Truss – JH 95 x 165
Fill all holes with LUMBERLOK Product Nails 30 x 3.15ø

2. ANGLE JOINTS - Octagonal Roof

LOAD DETAILS

Max Supported Truss Span	9000
Wind	Low to Very High
Roof Weight	Heavy
Supported Truss Centres	900 max.
Snow Load	to 1.0 kPa

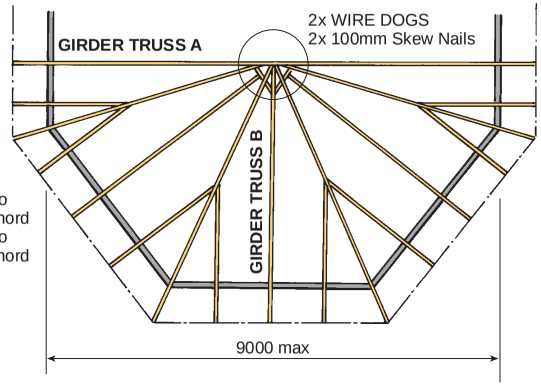

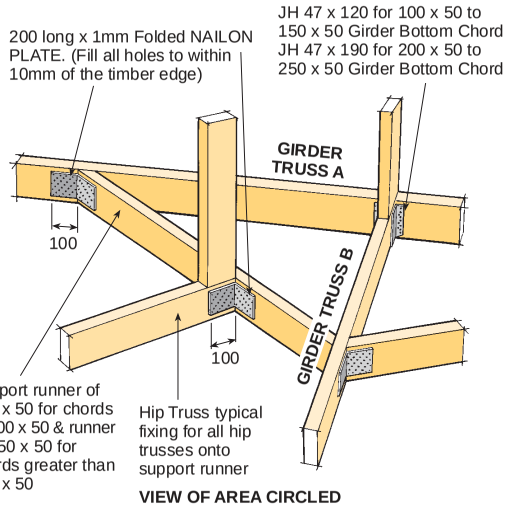

VIEW OF AREA CIRCLED

Boomerang Roof

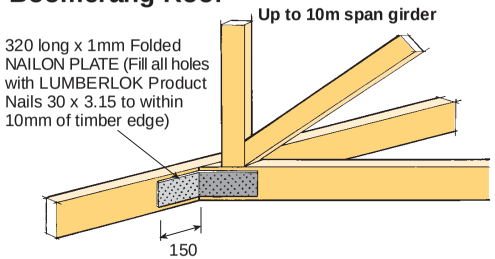

AUCKLAND
P.O. Box 58-014, Greenmount. Ph. 274-7109 Fax. 274-7100

GANG-NAIL GROUP LTD

CHRISTCHURCH
P.O. Box 8387, Riccarton. Ph. 348-8691 Fax. 348-0314

BC170037

Consent Issued BC170037

LINTEL FIXING SCHEDULE

ALTERNATIVE TO TABLE 8.14 & FIGURE 8.12 NZS 3604:2011

NOTE:

- All fixings are designed for vertical loads only. Dead loads include the roof weight and standard ceiling weight of 0.20 kPa.
- Refer to Table 8.19 NZS 3604:2011 for nailing schedule to resist horizontal loads.
- These fixings assume the correct choice of rafter/truss to top plate connections have been made.
- All fixings assume bottom plate thickness of 45mm maximum. Note: TYLOK options on timber species.
- Wall framing arrangements under girder trusses are not covered in this schedule.
- All timber selections are as per NZS 3604:2011.

DEFINITIONS

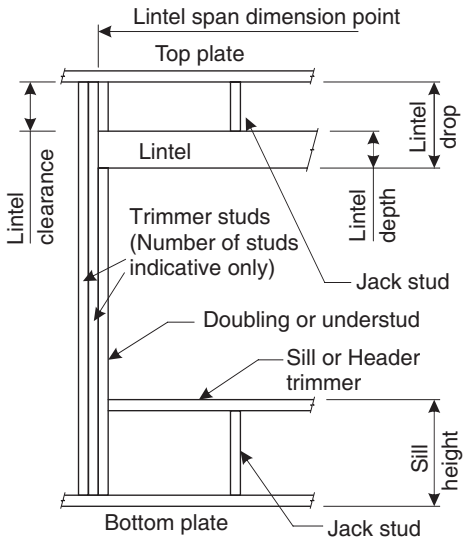

Lintel Supporting Girder Trusses:

Roof Tributary Area	Light Roof Wind Zone			Heavy Roof Wind Zone		
	L, M, H	VH	EH	L, M, H	VH	EH
8.6 m²	G	G	H	G	G	H
11.6 m²	G	H	H	G	G	H
12.1 m²	G	H	H	G	H	H
15.3 m²	H	H	-	G	H	H
19.1 m²	H	-	-	G	H	-
20.9 m²	H	-	-	H	H	-
21.8 m²	H	-	-	H	-	-
34.3 m²	-	-	-	H	-	-

Notes:
1) Roof Tributary Area = approx. 1/2 x (Total roof area on girder and rafter trusses supported by lintel)
2) Assumed girder truss is at mid-span or middle third span of lintel
3) Use similar fixings for both ends of lintel
4) All other cases require specific engineering design

SELECTION CHART FOR LINTEL FIXING

Lintel Span	Loaded Dimension (See Fig. 1.3 NZS 3604:2011)	Light Roof Wind Zone					Heavy Roof Wind Zone				
		L	M	H	VH	EH	L	M	H	VH	EH
0.7	2.0	E	E	E	E	F	E	E	E	E	E
	3.0	E	E	E	F	F	E	E	E	E	F
	4.0	E	E	F	F	F	E	E	E	F	F
	5.0	E	F	F	F	G	E	E	F	F	F
	6.0	E	F	F	G	G	E	E	F	F	G
0.9	2.0	E	E	E	F	F	E	E	E	E	F
	3.0	E	E	F	F	F	E	E	E	F	F
	4.0	E	E	F	F	F	E	E	F	F	F
	5.0	E	F	F	F	G	E	E	F	F	F
	6.0	E	F	F	G	G	E	E	F	F	G
1.0	2.0	E	E	E	F	F	E	E	E	E	F
	3.0	E	E	F	F	F	E	E	E	F	F
	4.0	E	F	F	F	G	E	E	F	F	F
	5.0	E	F	F	G	G	E	E	F	F	G
	6.0	E	F	F	G	G	E	E	F	F	G
1.2	2.0	E	E	F	F	F	E	E	E	F	F
	3.0	E	E	F	F	F	E	E	F	F	F
	4.0	E	F	F	G	G	E	E	F	F	G
	5.0	E	F	F	G	G	E	E	F	F	G
	6.0	F	F	G	G	H	E	E	F	G	G
1.5	2.0	E	E	F	F	F	E	E	E	F	F
	3.0	E	F	F	F	G	E	E	F	F	F
	4.0	E	F	F	G	G	E	E	F	F	G
	5.0	F	F	G	G	H	E	E	F	G	G
	6.0	F	F	G	H	H	E	E	F	G	H
2.0	2.0	E	F	F	F	G	E	E	F	F	F
	3.0	E	F	F	G	G	E	E	F	F	G
	4.0	F	F	G	G	H	E	E	F	G	G
	5.0	F	F	G	H	H	E	E	F	G	H
	6.0	F	G	G	H	H	E	F	G	H	H
2.4	2.0	E	F	F	G	G	E	E	F	F	G
	3.0	F	F	G	G	H	E	E	F	G	G
	4.0	F	F	G	H	H	E	E	F	G	H
	5.0	F	G	G	H	H	E	F	G	H	H
	6.0	F	G	H	H	-	E	F	G	H	H
3.0	2.0	E	F	F	G	G	E	E	F	F	G
	3.0	F	F	G	H	H	E	E	F	G	H
	4.0	F	G	G	H	H	E	F	G	H	H
	5.0	F	G	H	H	-	E	F	G	H	H
	6.0	F	G	H	-	-	E	F	G	H	-
3.6	2.0	F	F	G	G	H	E	E	F	G	G
	3.0	F	F	G	H	H	E	F	G	G	H
	4.0	F	G	H	H	-	E	F	G	H	H
	5.0	F	G	H	-	-	E	F	G	H	-
	6.0	G	H	H	-	-	E	F	H	-	-
4.2	2.0	F	F	G	G	H	E	E	F	G	G
	3.0	F	G	H	H	-	E	F	G	H	H
	4.0	F	G	H	-	-	E	F	G	H	-
	5.0	G	H	H	-	-	E	F	H	-	-
	6.0	G	H	-	-	-	E	F	H	-	-
4.5	2.0	F	F	G	H	H	E	E	F	G	H
	3.0	F	G	H	H	-	E	F	G	H	H
	3.4	F	G	H	H	-	E	F	G	H	-
	4.0	F	G	H	-	-	E	F	G	H	-
	5.0	G	H	-	-	-	E	F	H	-	-
	6.0	G	H	-	-	-	E	F	H	-	-
4.8	2.0	F	F	G	H	H	E	E	F	G	H
	3.0	F	G	H	H	-	E	F	G	H	H
	3.2	F	G	H	H	-	F	F	G	H	-
	4.0	F	G	H	-	-	E	F	H	H	-
	5.0	G	H	-	-	-	E	F	H	-	-
	6.0	G	H	-	-	-	E	F	H	-	-

MiTek

© Copyright 2011 MiTek Holdings, Inc.
All rights reserved.

Consent Issued BC170037

BC170037

LUMBERLOK®

LINTEL FIXING OPTIONS

TYPE E
1.4 kN

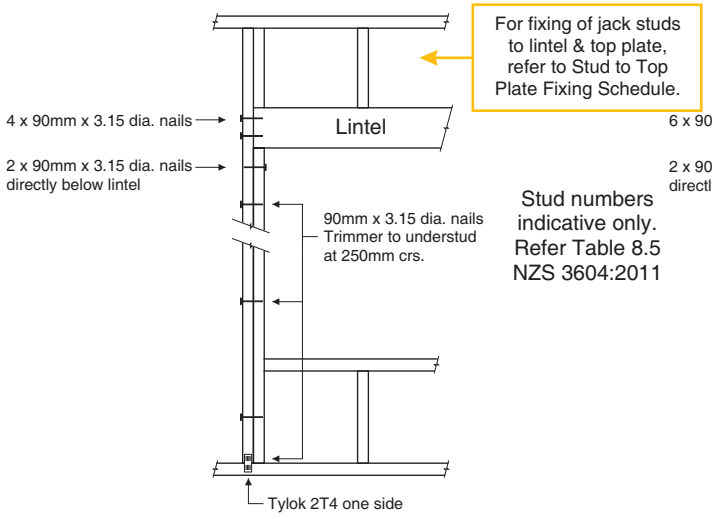

TYPE F
4.0 kN

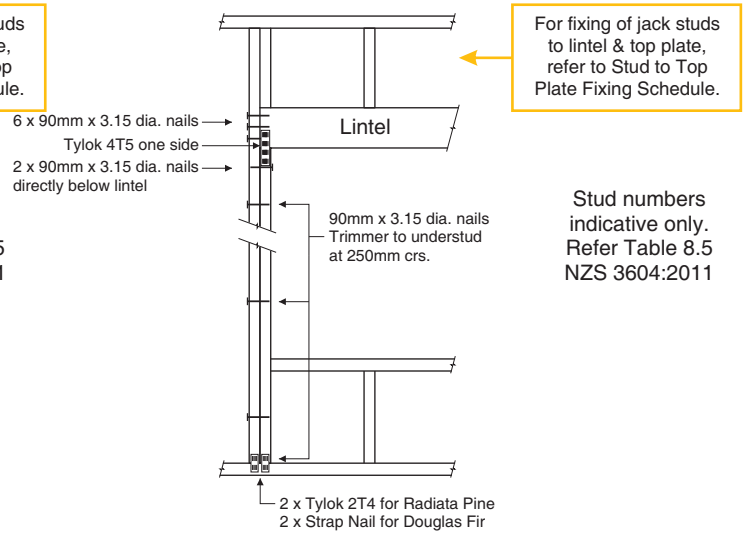

TYPE G
7.5 kN

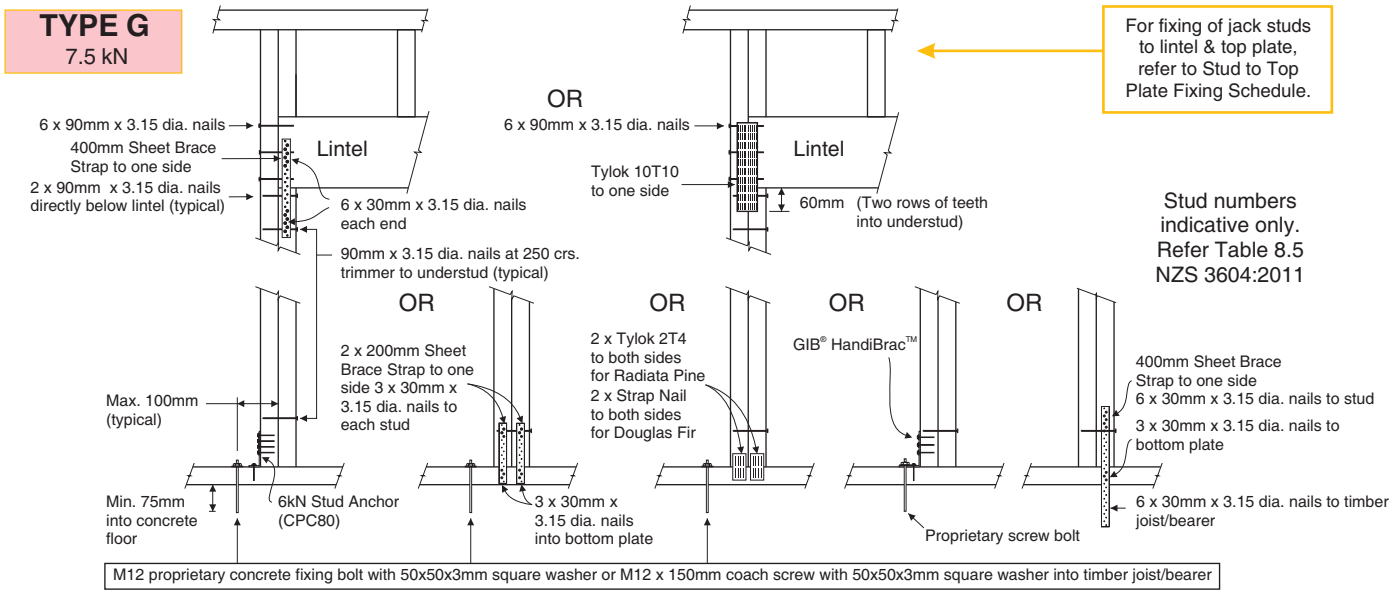

TYPE H
13.5 kN

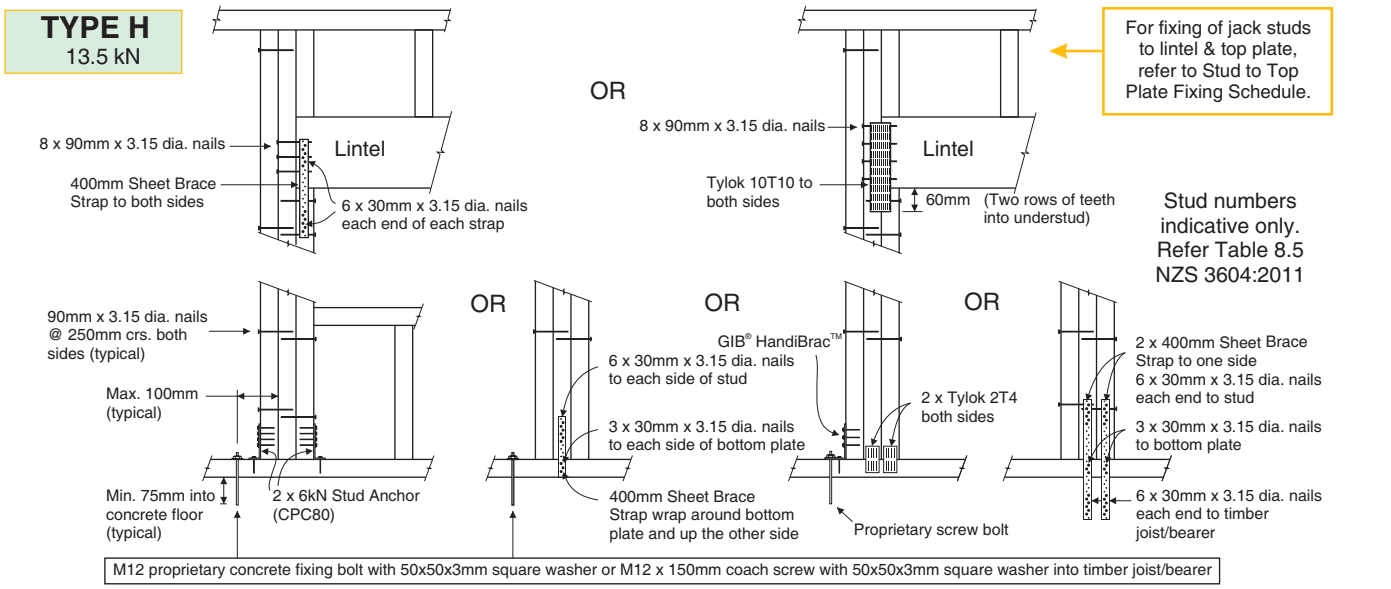

MiTek New Zealand Limited

MiTek®
GANG-NAIL® LUMBERLOK® BOWMAC®

AUCKLAND
PO Box 58-014, Botany 2163
Phone: 09-274 7109
Fax: 09-274 7100

CHRISTCHURCH
PO Box 8387, Riccarton 8440
Phone: 03-348 8691
Fax: 03-348 0314

www.miteknz.co.nz

© Copyright 2011 MiTek Holdings, Inc.
All rights reserved.

STUD TO TOP PLATE FIXING SCHEDULE
ALTERNATIVE TO TABLE 8.18 NZS 3604:2011

NOTE:

- ★ All fixings are designed to resist vertical loads only. Dead loads include the roof weight and standard ceiling weight of 0.20 kPa.
- ★ Refer to Table 8.19 NZS 3604:2011 for nailing schedule to resist lateral loads.
- ★ These fixings assume the correct choice of rafter/truss to top plate connections have been made.
- ★ Gable end wall top plate/stud connections where the adjacent rafter/truss is located within 1200mm of gable end wall with a maximum verge overhang of 750mm, requires fixing type A as shown below.
- ★ All fixings assume top plate thickness of 45mm maximum.
- ★ Wall framing arrangements under girder trusses are not covered in this schedule.
- ★ All timber selections are as per NZS 3604:2011.

LOADED DIMENSION DEFINITION

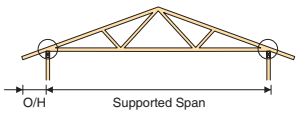

External wall
Standard truss

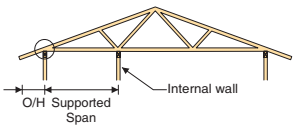

External wall
Internally supported truss

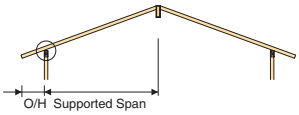

External wall
Rafter roof

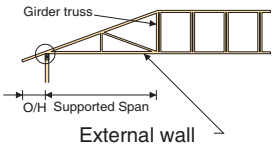

External wall
Jack truss

EXTERNAL WALL
LOADED DIMENSION =
$\frac{\text{SUPPORTED SPAN}}{2}$ + O/H

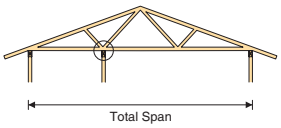

Internal wall
Internally supported truss
(overhang dimension does not apply)

INTERNAL WALL
LOADED DIMENSION =
$\frac{\text{TOTAL SPAN}}{2}$

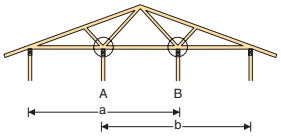

Multiple internal walls
(overhang dimension does not apply)

MULTIPLE INTERNAL WALL
LOADED DIMENSION FOR
WALL A = $\frac{a}{2}$
WALL B = $\frac{b}{2}$

FIXING SELECTION CHART

(Suitable for walls supporting roof members at 600, 900 or 1200mm crs.)

Wind Zones L, M, H, VH, EH, as per NZS 3604:2011

Loaded Dimension (m) Stud Centres			Light Roof Wind Zone					Heavy Roof Wind Zone				
300mm	400mm	600mm	L	M	H	VH	EH	L	M	H	VH	EH
3.0	2.3	1.5	A	A	B	B	B	A	A	B	B	B
4.0	3.0	2.0	A	A	B	B	B	A	A	B	B	B
5.0	3.8	2.5	A	B	B	B	B	A	A	B	B	B
6.0	4.5	3.0	A	B	B	B	B	A	A	B	B	B
7.0	5.3	3.5	A	B	B	B	B	A	A	B	B	B
8.0	6.0	4.0	A	B	B	B	B	A	A	B	B	B
9.0	6.8	4.5	B	B	B	B	B	A	A	B	B	B
10.0	7.5	5.0	B	B	B	B	B	A	A	B	B	B
11.0	8.3	5.5	B	B	B	B	B	A	A	B	B	B
12.0	9.0	6.0	B	B	B	B	B	A	A	B	B	B

FIXING OPTIONS

FIXING TYPE A
0.7 kN

2 x 90mm x 3.15 dia. plain steel wire nails driven vertically into stud.

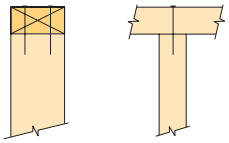

FIXING TYPE B
4.7 kN

CHOOSE ANY OF THE 3 OPTIONS BELOW

2 x 90mm x 3.15 dia. plain steel wire nails driven vertically into stud.

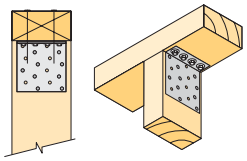

Plus
LUMBERLOK
6kN Stud Anchor
(CPC80)

2 x 90mm x 3.15 dia. plain steel wire nails driven vertically into stud.

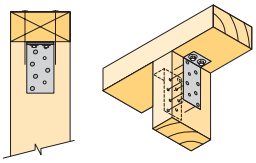

Plus
2 x LUMBERLOK
CPC40

Recommended for internal wall options to avoid lining issues

2 x 90mm x 3.15 dia. plain steel wire nails driven vertically into stud.

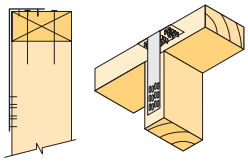

Plus
LUMBERLOK
Stud Strap
(one face only)

Note:
To calculate the number of B type fixings required, divide the wall length by the stud centres, add 1 to this figure and locate this number of fixings as evenly as possible along the wall length. This figure includes the start and end studs in each wall length.

© Copyright 2011 MiTek Holdings, Inc.
All rights reserved.

Consent Issued BC170037

BC170037

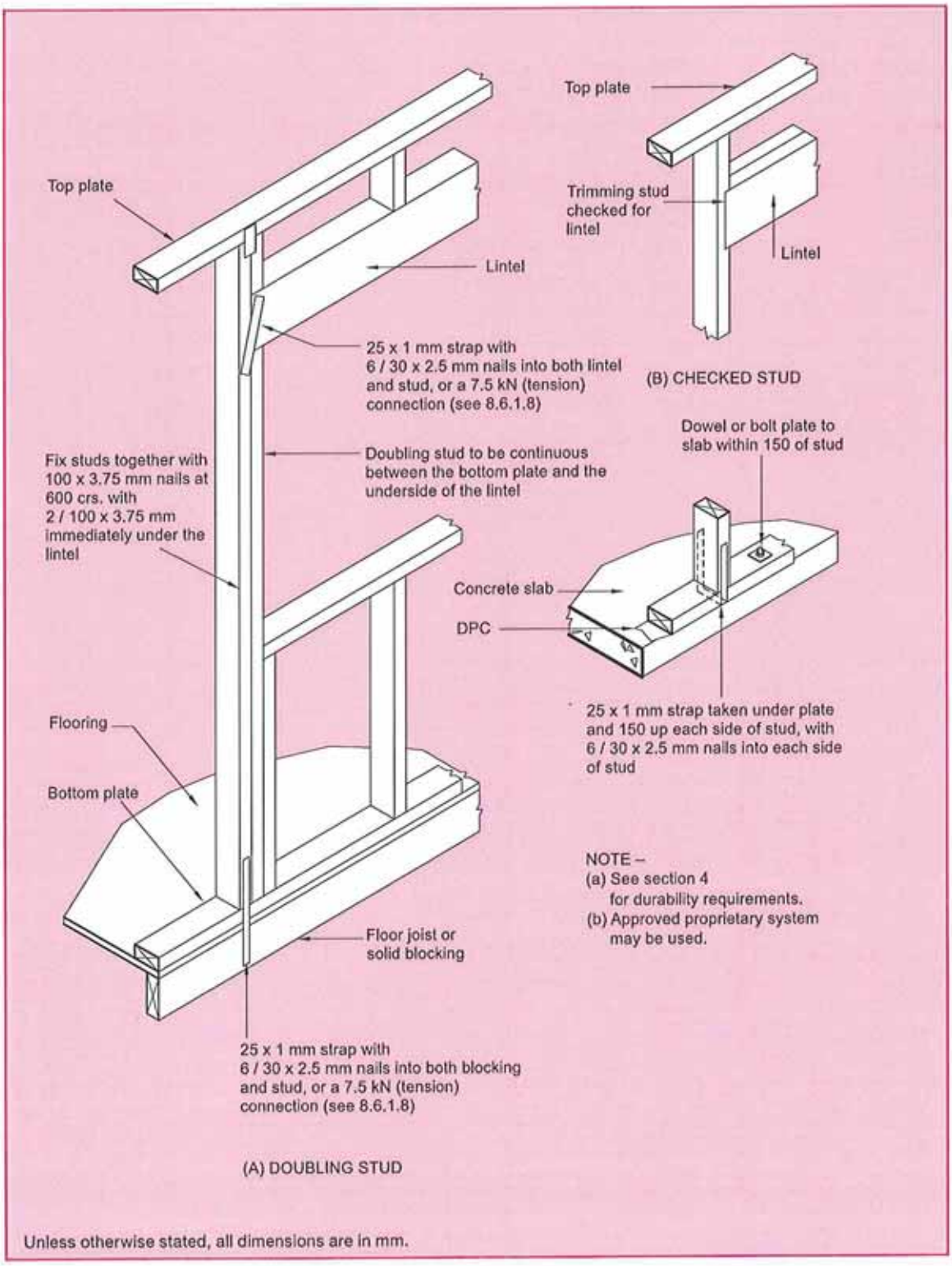

Figure 8.12 – Lintel fixing to prevent uplift (see 8.6.1.8 and table 8.14 (a) and (b))

Thermakraft

Consent Issued BC170037

CI/SfB BC170037
JUNE 2010

THERMAKRAFT 215 BITUMINOUS SELF SUPPORTING ROOFING UNDERLAY

APPLICATION AND INSTALLATION

Product Description

THERMAKRAFT 215 BITUMINOUS SELF SUPPORTING ROOFING UNDERLAY is specifically designed for use in Domestic and Commercial type buildings.

THERMAKRAFT 215 is a breathable, absorbent bituminous wall and roofing underlay.

THERMAKRAFT 215 will provide the following functions:

- Reduce wind entry into the cavity, thereby assisting the performance of thermal insulation.
- Highly water vapour permeable, thereby allowing excess water vapour which might otherwise condense in the structure, to escape.
- Provides a temporary protection against wind, dust, rain and other weathering elements until the external cladding is applied.

Applications

THERMAKRAFT 215 is suitable as a wall and roofing underlay where Fire Retardancy is **NOT** required, and with all cladding types.

THERMAKRAFT 215 is self supporting to 1200mm rafter/purlin spacing.

THERMAKRAFT 215 can be used as an Air Barrier.

THERMAKRAFT 215 must not be left exposed to the elements for more than 7 days. Cladding on the same day is recommended. If Fire Retardancy (FI <5) is required, use **Thermakraft** COVERTEK 407.

Installation Roofing

THERMAKRAFT 215 may be run vertically over purlins with a 150mm lap if roof pitch >8 degrees. Fix securely to purlins with 8mm staples or 20mm clouts. The membrane should be firmly laid to avoid excessive dishing between purlins.

THERMAKRAFT 215 may be run horizontally across rafter/trusses with a 150mm lap for roof pitches above 3 degrees. Fix securely with 8mm staples or 20mm clouts.

Control of Condensation

In climatic regions where condensation risks are high, such as cold or high humidity areas,care needs to be taken in specifying the correct design and installation to prevent moisture build-up in the roof cavities. Factors which adversely affect the condensation risk in roofing systems include;

- Humid, and/or cold climatic regions
- Warm/Skillion roof construction
- Low roof cavity air volume and restricted air movement
- Omitting Vapour Control Layers
- Ceiling penetrations and entry of warm air into roof cavities
- Occupancy activities which have high moisture loading on conditioned spaces
- Low pitched roof
- Bulk insulation
- Building structures ability to naturally dry Construction Moisture

Skillion and Warm Roof Construction are particularly sensitive to moisture accumulation and the design and installation of roof construction needs to take into account the higher condensation risks. Refer MRM Code of Practice for details.

Storage

THERMAKRAFT 215 should be stood on end in dry conditions.
Protect from the weather and direct sunlight.

Roll Dimensions

1250mm x 40.0m = 50m^2	20kg	
1250mm x 20.0m = 25m^2	10kg	(2 per pack)
1450mm x 34.5m = 50m^2	20kg	

WAIMAKARIRI DISTRICT COUNCIL
Plans and specifications APPROVED in accordance with the Building Act 2004, clause 49 and the Building Regulations 1992, Clause 3
170037 13/03/2017 petert

For more information regarding **Thermakraft** COVERTEK 407 **FIRE RETARDANT SELF SUPPORTING ABSORBENT BREATHABLE SYNTHETIC NON WOVEN ROOFING UNDERLAY** refer to the "DESIGNER and USER GUIDELINES" - Direct and Cavity Fix, or contact **Thermakraft Customer Services** on **0800 806 595**.

E. & O. E.

Thermakraft

Consent Issued BC170037

CI/SfB	BC170037
JUNE 2010	

THERMAKRAFT 215 BITUMINOUS SELF SUPPORTING ROOFING UNDERLAY

TECHNICAL SPECIFICATIONS

Technical Data

THERMAKRAFT 215 BITUMINOUS SELF SUPPORTING ROOFING UNDERLAY complies with the requirements of NZBC E2/AS1 Table 23.

Nominal Grammage 400g/m2

NZBC E2/AS1 TABLE 23 AS A WALL UNDERLAY REQUIREMENTS		
NZBC E2/AS1 TABLE 23 WALL UNDERLAY PROPERTIES	**PROPERTY PERFORMANCE REQUIREMENTS**	**PROPERTY PERFORMANCE**
Absorbency	≥100 gsm	Pass
Vapour Resistance	≤7 MN.s/g	Pass
pH of Extract	≥6 and ≤9	Pass
Shrinkage	≤0.5%	Pass
Water Resistance	≥100mm	Pass
Air Barrier	≥0.1 MN.s/m^3	Pass
Duty		Heavy

NZS2295:2206 Classification		
Flammability Index		**Non Fire Retardant**
Wind Zone	R2	Up to Very High
NZS2295:2006 Classification	R2	Self Supporting

Durability/Limitations

For **THERMAKRAFT 215** to meet the Performance Requirements of NZBC Clause B2, Durability B2.3.1(a) 50 years and B2.3.1(b) 15 years, E2 External Moisture, **THERMAKRAFT 215**:

- must be installed in accordance to the "APPLICATION and INSTALLATION GUIDELINES",
- run length no greater than 10 metres,
- is not left exposed for more than (7 days) roof,
- when used on LOSP treated timber, the timber must be free of solvent,
- installed by a licensed building practitioner,
- installed in accordance with the Roofing Code of Practice.

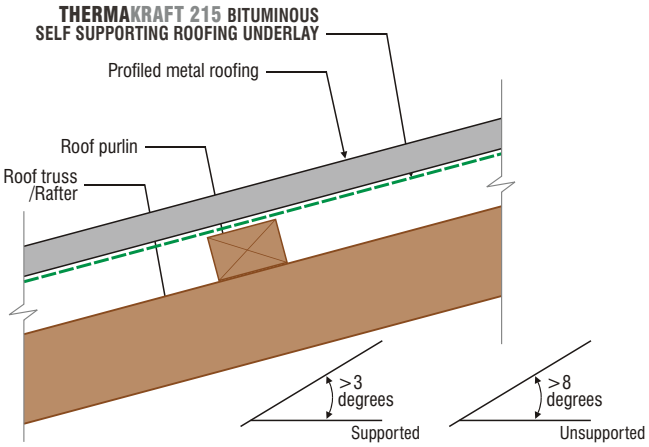

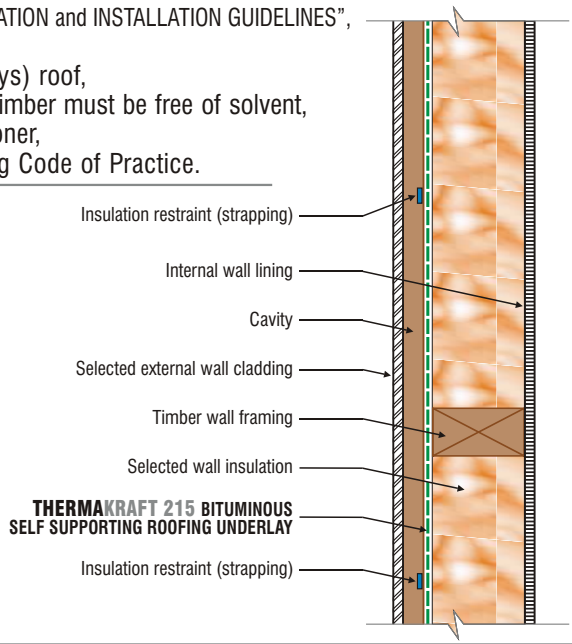

The recommendations contained in **Thermakraft's** literature are based on good building practice, but are not an exhaustive statement of all relevant information and are subject to any conditions contained in the Warranty. All product dimensions and performance claims are subject to any variation caused by normal manufacturing process and tolerances. Furthermore, as the successful performance of the relevant system depends on numerous factors outside the control of **Thermakraft** (for example quality of workmanship and design), **Thermakraft** shall not be liable for the recommendations in that literature and the performance of **the Product**, including its suitability for any purpose or ability to satisfy the relevant provisions of the Building Code, regulations and standards.

Thermakraft Industries (NZ) Ltd

11 Turin Place, East Tamaki, Auckland, New Zealand
PO Box 58-112, Botany, Manukau 2163, New Zealand
Phone: 09-273 3727 Fax: 09-273 3726 Free Phone: 0800 806 595
Email: sales@thermakraft.co.nz Website: www.thermakraft.co.nz

E. & O. E.

Consent Issued BC170037

BC170037

Metalcraft ROOFING

0800 ROOFNZ (0800 766369)
Issue Date August 2008

Metalline Fascia 185mm

Metalline Fascia 185mm is used on both eave line and gables in conjunction with Metalline Quad Gutter to provide a quality Fascia and Gutter Solution. Metalline Fascia is also compatible with most gutter profiles and looks great with any residential roof finish. Metalline Fascia is available in Zincalume, Colorsteel Endura and Colorsteel Maxx. Please consult your nearest Metalcraft branch for timberwork set out details if you are unsure as there is some variances between different sized fascia systems.

Cross-sectional Area:

Metalline Fascia 185mm with Metalline Quad Gutter = 5550mm² (A)
Metalline Fascia 185mm with Squareline Gutter = 6090mm² (B)
Metalline Fascia 185mm with Hiline Gutter = 7550mm² (C)
Metalline Fascia 185mm with Box Gutter 125mm = 8435mm² (D)

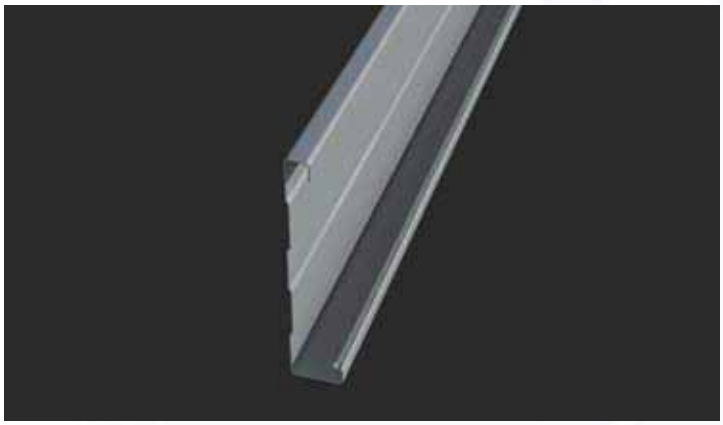

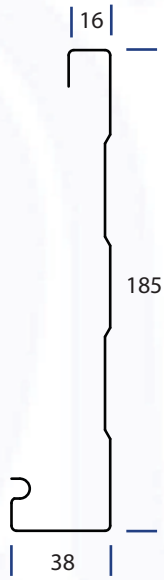

all dimensions are nominal

Catchment Area of Roof v Cross Sectional Area of Gutter

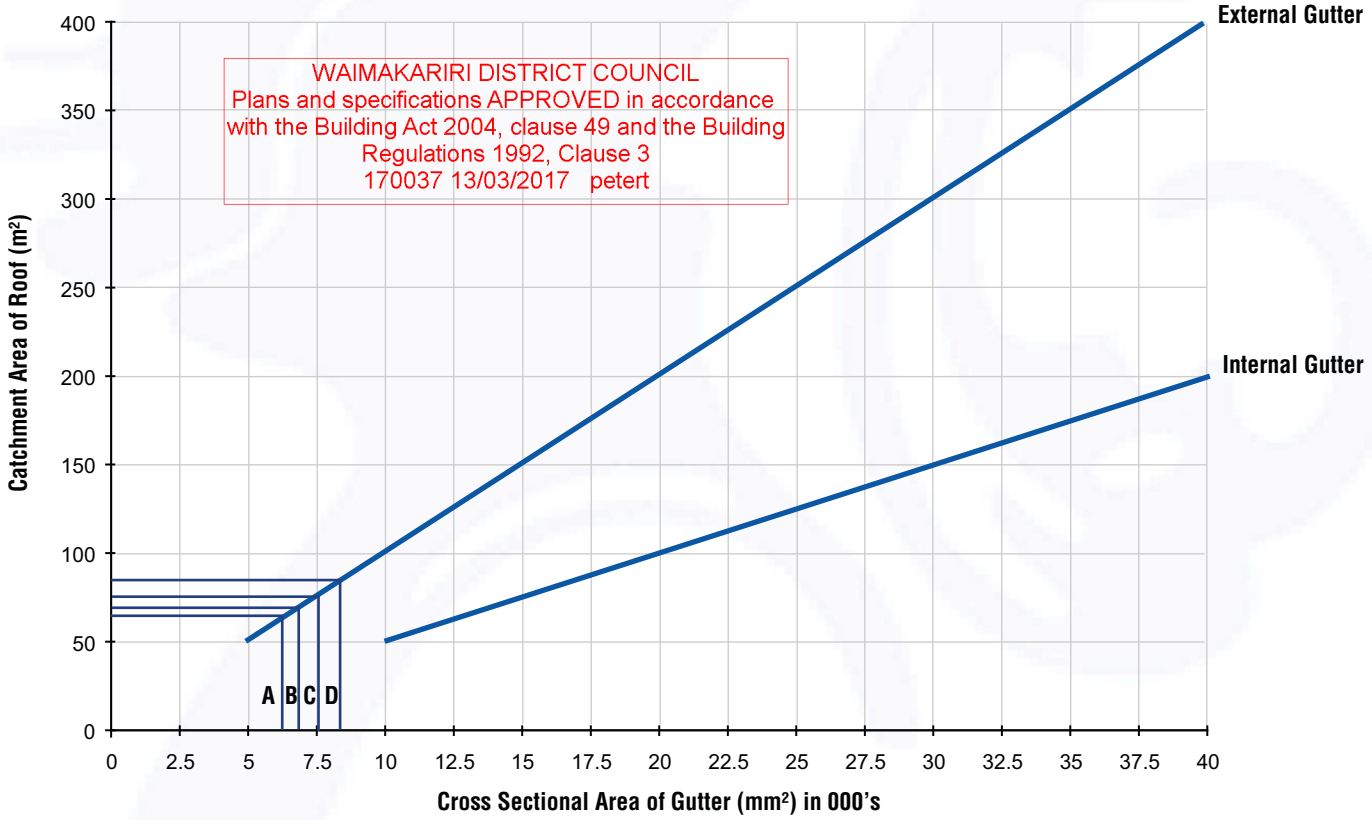

WAIMAKARIRI DISTRICT COUNCIL
Plans and specifications APPROVED in accordance with the Building Act 2004, clause 49 and the Building Regulations 1992, Clause 3
170037 13/03/2017 petert

Note: The graph is based on a rainfall intensity of 100mm / hour and roof pitches less than 10 degrees.
For more information on roof catchment areas and the effect of gutter cross sectional areas download the document on Roof Drainage

Manufacturing Locations Auckland, Christchurch

Metalline Fascia 185mm is available for purchase from all Metalcraft branch locations

www.metalcraftroofing.co.nz

Consent Issued BC170037

BC170037

Metalcraft ROOFING

0800 ROOFNZ (0800 766369)
Issue Date August 2008

Metalline Quad Gutter

In Christchurch product is known as Colonial Quad Gutter

Metalline Quad Gutter is our most popular residential profile. Whether you are renovating or involved in a new build, this profile will enhance the appearance of your home. The Metalline system uses concealed brackets and is compatible with Metalcraft Metalline Fascia or timber fascia. Metalline Quad Gutter is available with overflow slots to prevent flooding from blockages, and snow straps are stocked to suit this profile if required. Metalline Quad Gutter is available in Zincalume, Galvsteel, Colorsteel Endura and Colorsteel Maxx.

Cross-sectional Area: 5550mm²

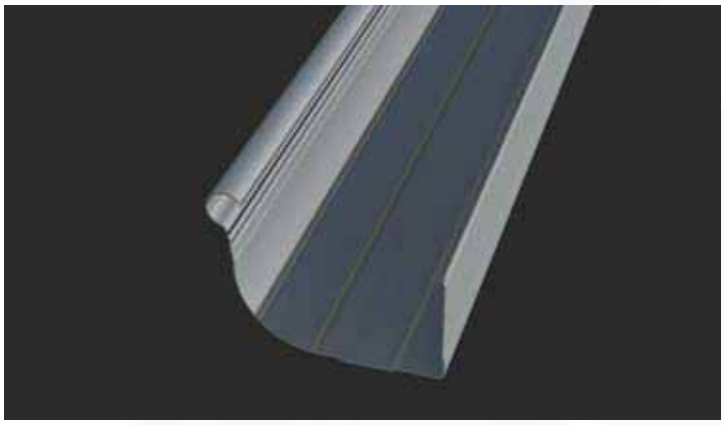

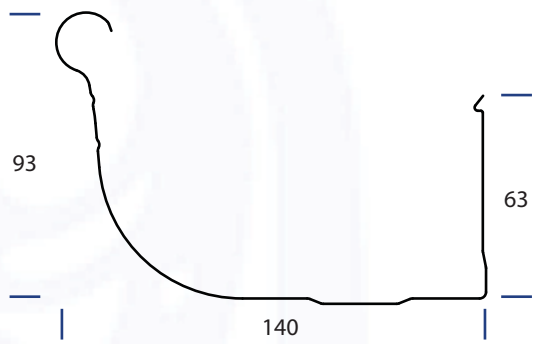

all dimensions are nominal

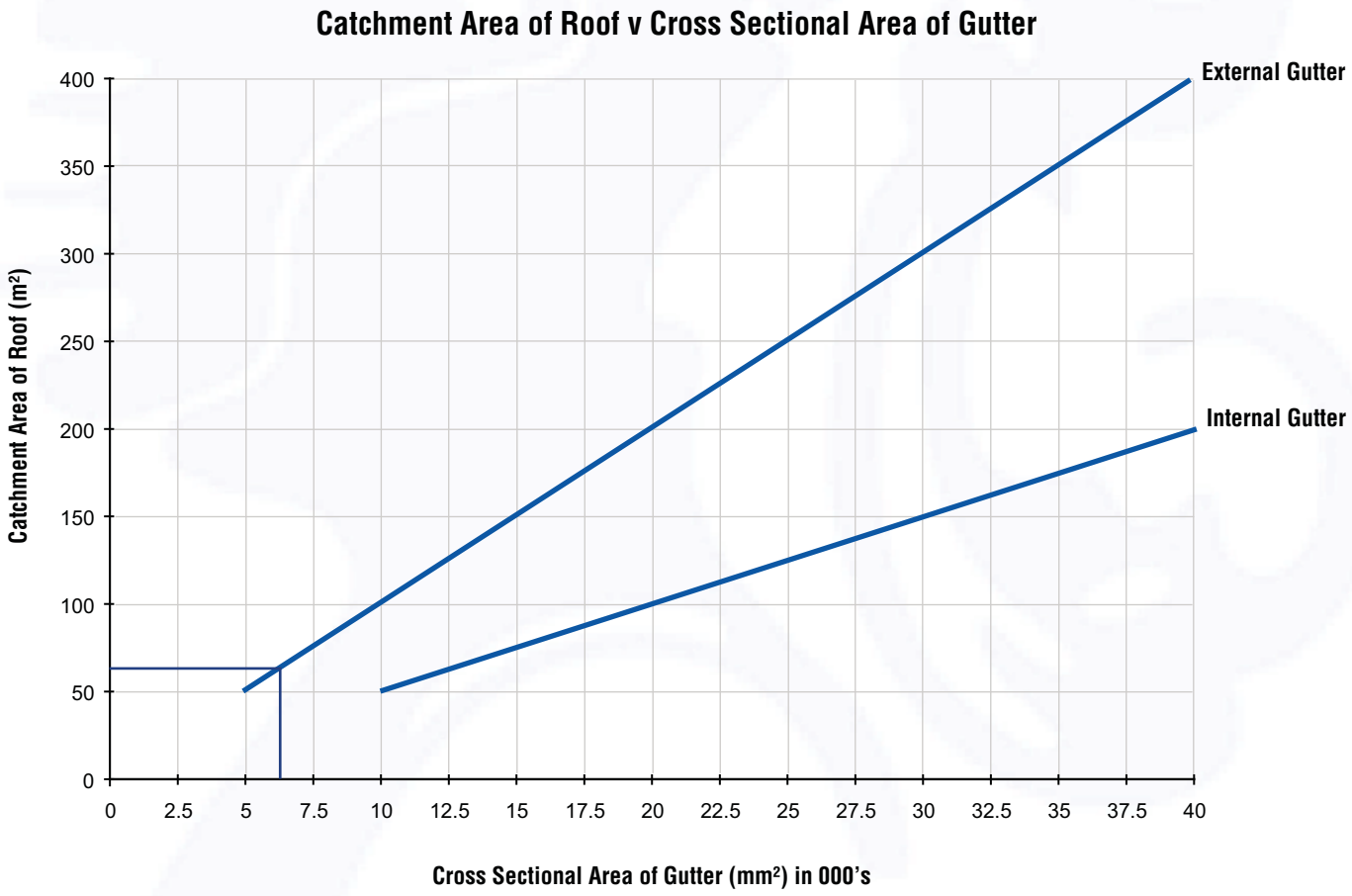

Note: The graph is based on a rainfall intensity of 100mm / hour and roof pitches less than 10 degrees.
For more information on roof catchment areas and the effect of gutter cross sectional areas download the document on Roof Drainage

Manufacturing Locations Auckland, Christchurch

Metalline Quad Gutter is available for purchase from all Metalcraft branch locations

www.metalcraftroofing.co.nz

Consent Issued BC170037

BC170037

Rectangular Downpipe

Metalcraft ROOFING

0800 ROOFNZ (0800 766369)
Issue Date August 2008

Rectangular downpipe is an excellent alternative to the standard round downpipes available and looks great in combination with the Metalcraft range of box gutters. Rectangular downpipe is 75mm by 55mm and is available in Zincalume, Galvsteel, Colorsteel Endura and Colorsteel Maxx.

Cross-sectional Area: 3712mm²

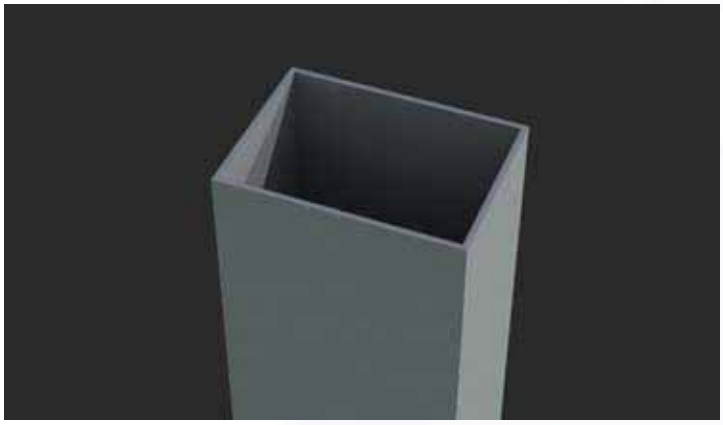

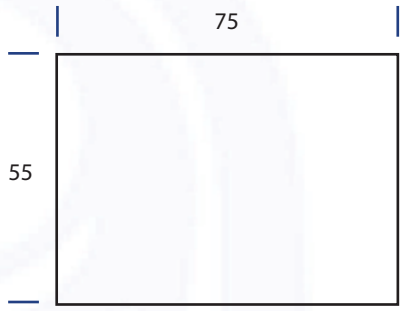

all dimensions are nominal

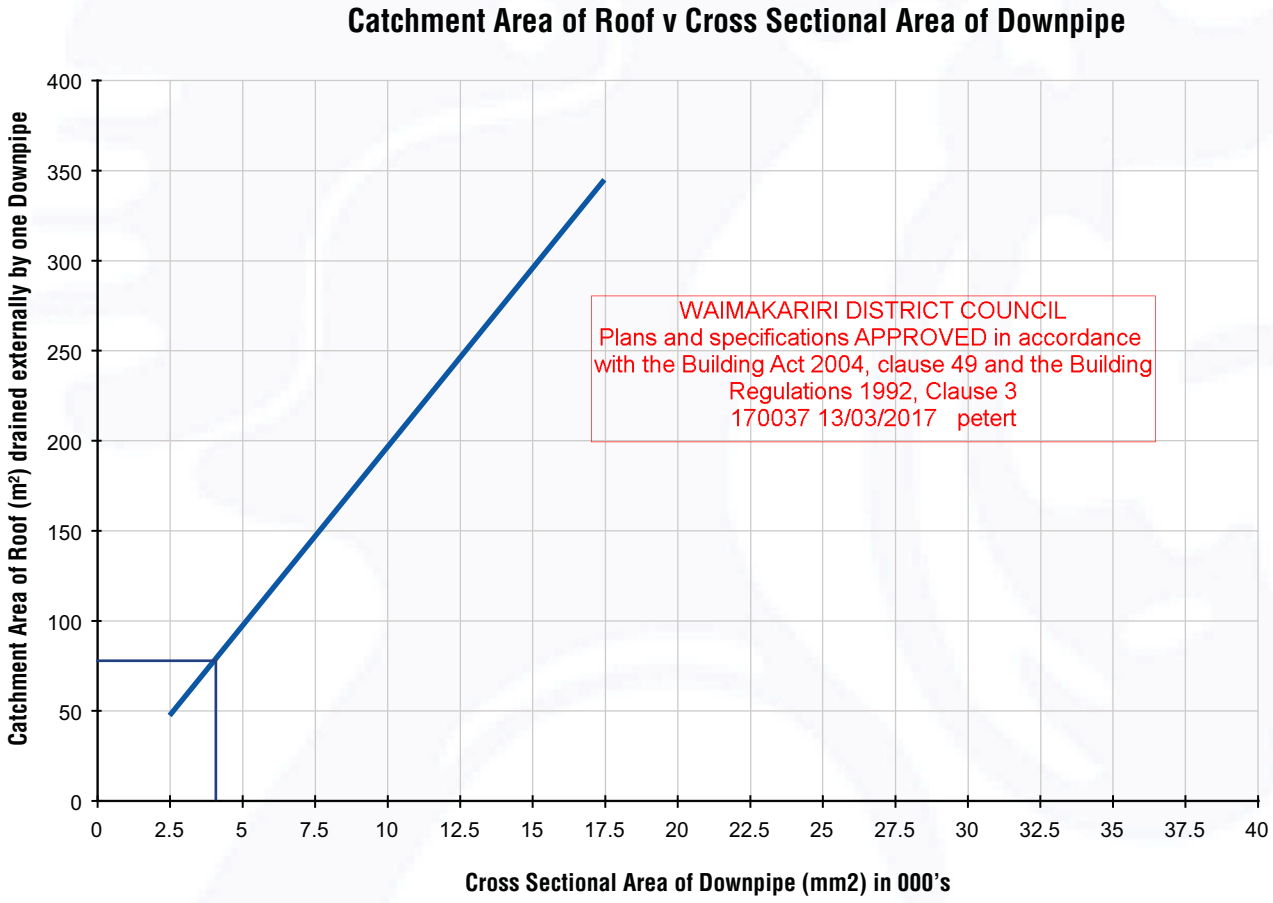

WAIMAKARIRI DISTRICT COUNCIL
Plans and specifications APPROVED in accordance with the Building Act 2004, clause 49 and the Building Regulations 1992, Clause 3
170037 13/03/2017 petert

Note: The graph is based on a rainfall intensity of 100mm / hour and roof pitches less than 10 degrees.
For more information on roof catchment areas and the effect of gutter cross sectional areas download the document on Roof Drainage.

Manufacturing Locations Christchurch

Rectangular Downpipe is available for purchase from all Metalcraft branch locations

www.metalcraftroofing.co.nz

Consent Issued BC170037

LUMBERLOK®

SCREW TIES
FOR BRICK VENEER FIXING

- ★ Medium duty (EM) classification
- ★ Tested by BRANZ in accordance with AS/NZS 2699.1:2000
- ★ BRANZ test report No. ST0725 November 2007
- ★ Suitable for both 'dry bedding' and encapsulated mortar
- ★ Hot Dip Galvanised ties for Zones B & C, and Stainless Steel Grade 316 ties for Zone D meet NZS 3604:2011 Sect. 4 Durability
- ★ Available in 85mm and 105mm sizes

WAIMAKARIRI DISTRICT COUNCIL
Plans and specifications APPROVED in accordance with the Building Act 2004, clause 49 and the Building Regulations 1992, Clause 3
170037 13/03/2017 petert

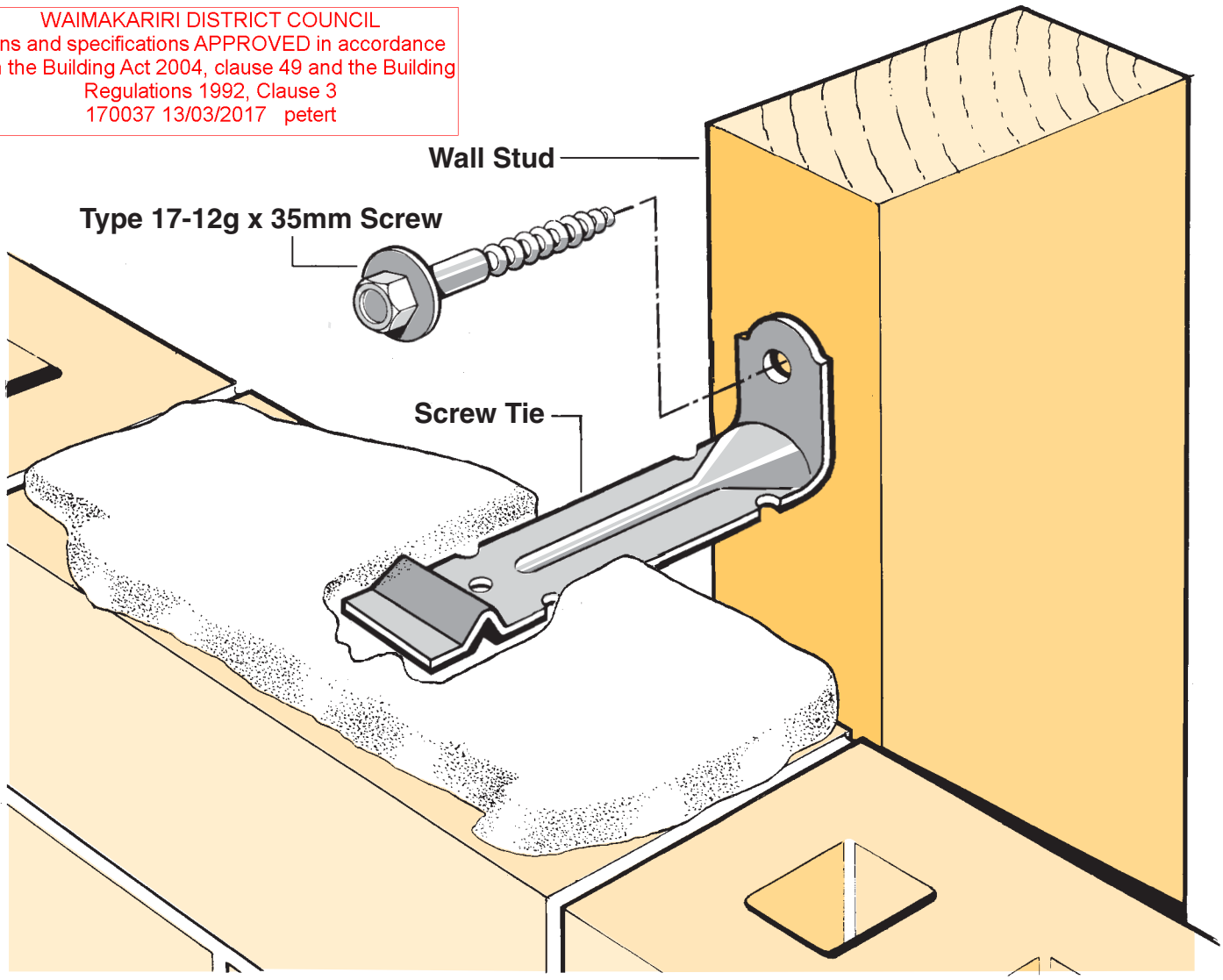

Available from leading Builders Supply Merchants throughout New Zealand

MiTek®

© Copyright 2011 MiTek Holdings, Inc.
All rights reserved.

Consent Issued BC170037

BC170037

LUMBERLOK®

70 SERIES BRICK

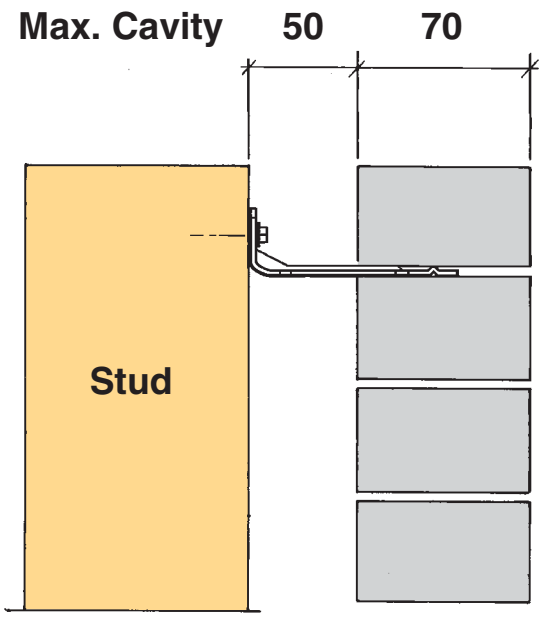

Screw Tie Short (85mm)

90 SERIES BRICK

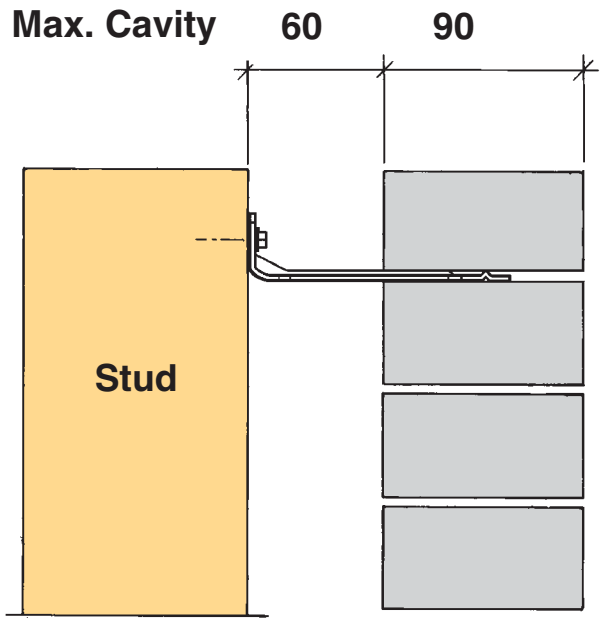

Screw Tie Long (105mm)

- ★ All brick work must be constructed in accordance with NZS 4210:2001 Masonry Construction:Materials and Workmanship. Screw Ties must be applied accordingly and are not to be hammered into timber framing.
- ★ Water shedding shoulder prevents transfer of the moisture from tie to building.
- ★ Nail hole for Oamaru Stone.
- ★ Angled neck encourages increased tie embedment in mortar.

Material: 1.2mm NZCC-SD Hot Dip Galvanised Steel
Screws: Type 17-12g x 35mm Hex Head Hot Dip Galvanised Screws
Packaging: 250 ties per box including screws

Also available in Stainless Steel Grade 316 for Zone D.

MiTek®
GANG-NAIL® LUMBERLOK® BOWMAC®

MiTek New Zealand Limited

AUCKLAND
PO Box 58-014, Botany 2163
Phone: 09-274 7109
Fax: 09-274 7100

CHRISTCHURCH
PO Box 8387, Riccarton 8440
Phone: 03-348 8691
Fax: 03-348 0314

www.miteknz.co.nz

© Copyright 2011 MiTek Holdings, Inc.
All rights reserved.

Vent Selection Chart

Application	Room Size (m^3)	Wall/Ceiling Fans: Standard	Wall/Ceiling Fans: Pro Series	Thru Wall Fan Kits: Standard	Thru Wall Fan Kits: Pro Series	Heat/Fan/Light Kits: Pro Series
- Toilets - Laundries - No drier - Cellar - Offices	$5m^3$	XF125	XFLP125	XP125	XPLP125	Heat 'n Vent 2
	$10m^3$	XF125	XFLP125	XP125	XPLP125	Heat 'n Vent 2
These rooms require up to 10 air changes per hour	$15m^3$	XF150	XFLP150	XP150	XPLP150	Heat 'n Vent 4
- Bathrooms - Showers - Ensuites	$6m^3$	XF150	XFLP150	XP150	XPLP150	Heat 'n Vent 2
	$12m^3$	XF150	XFLP150	XP150	XPLP150	Heat 'n Vent 4
These rooms require between 11 and 15 air changes per hour	$18m^3$	XF150	XFLP150	XP150	XPLP150	Heat 'n Vent 4 (12)
- Kitchens - Laundries - With drier	$5m^3$	XF150	XFLP150	XP150	XPLP150	
	$10m^3$	XF150	XFLP150	XP150	XPLP150	
These rooms require between 15 and 20 air changes per hour	$15m^3$	XSF230		XPS230		

Selecting the Right Fan is as easy as... 1,2, 3

Select your required application

Eg: Bathrooms
(11 - 15 air changes per hour)

1

Calculate the volume of the room in cubic metres (m^3) by multiplying the length x width x height.

Eg: 2.3m x 2.2m x 2.4m = $11.6m^3$

(Select a room volume greater than $12m^3$)

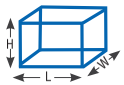

2

Follow the $12m^3$ row across and select one of the fan kits available based on your mounting requirements (see top headings and photo's)

Eg: If you require a Thru Wall Kit then you can choose any of the XP150 or XPLP150 kits

3

Securimax
Fax: (09) 259 1661 • Email: sales@securimax.co.nz • Website: www.securimax.co.nz

Vent Selection Chart

In-Line Fan Kits: Standard	In-Line Fan Kits: Pro Series	In-Line Fan Kits: Standard Mixflow	In-Line Fan Kits: Standard Extract-a-lite	In-Line Fan Kits: Pro Series Extract-a-lite	Window Fans: Standard	Thru Roof Fan Kits: Standard
SF125	SFLP125	MKLP100	EL100	ELLP125	WF150	HYPER
SF125	SFLP125	MKLP100	EL125	ELLP125	WF150	HYPER
SF150	SFLP150	MKLP125	EL150	ELLP150	WF150	HYPER
SF150	SFLP150	MKLP100	EL150	ELLP125	WF150	HYPER
SF150	SFLP150	MKLP100	EL150	ELLP150	WF150	HYPER
SF150	SFLP150	MKLP125	EL150	ELLP150	WF150	ULTRA
SF150	SFLP150	MKLP100	EL150	ELLP125	WF150	HYPER
SF150	SFLP150	MKLP125	EL150	ELLP150	WF150	HYPER
		MKLP150			WF230	ULTRA

Consent Issued BC170037

BC170037

Note: All selections are based on installed fan performance and maximum air change rates (figures in brackets show actual air changes stated if less than maximum)

Securimax
Fax: (09) 259 1661 • Email: sales@securimax.co.nz • Website: www.securimax.co.nz

Consent Issued BC170037

HEAT/FAN/LIGHT Models

GENERAL INFORMATION

Models	Cut-Out Size	Exterior Grille	Duct Type	Duct Length
PS Heat 'n Vent 4	300mm x 300mm	White Eggcrate	Aluminium	3m supplied (can be extended to 6m)
PS Heat 'n Vent 2	390mm x 210mm	White Eggcrate	Aluminium	3m supplied (can be extended to 6m)
Heat 'n Vent 2	380mm x 200mm	White Eggcrate	PVC	3m supplied (can be extended to 6m)
Light 'n Vent	270mm x 270mm	White Eggcrate	PVC	3m supplied (can be extended to 6m)

DIMENSION INFORMATION

Models	A	B	C	D
PS Heat 'n Vent 4	338	338	170	120
PS Heat 'n Vent 2	435	260	185	120
Heat n Vent	400	250	195	100
Light n Vent	310	310	205	100

Dimensions - PS Heat 'n Vent 4

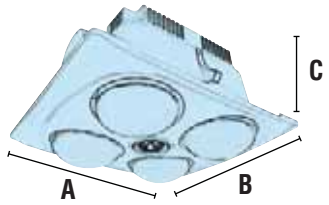

Dimensions - PS Heat 'n Vent 2

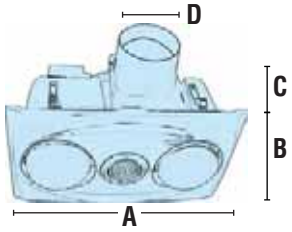

Dimensions - Heat 'n Vent 2

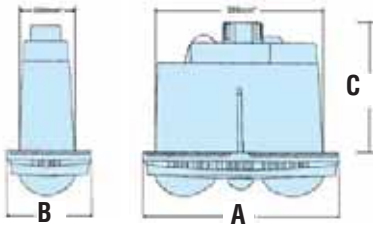

Dimensions - Light 'n Vent

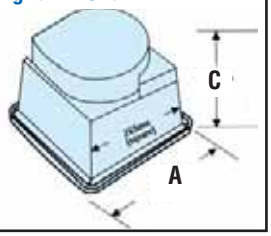

TECHNICAL SPECIFICATION

Models	PS Heat 'n Vent 4	PS Heat 'n Vent 2	Heat 'n Vent 2	Light 'n Vent
Power	220 - 240V	220 - 240V	220 - 240V	220 - 240V
Fan	Centrifugal	Centrifugal	Centrifugal	Centrifugal
Fan Performance	60l/s, 216m³/hr	50l/s, 180m³/hr	35l/s, 126m³/hr	51l/s, 184m³/hr
Heat Lamps	4 x 275W	2 x 275W	2 x 275W	-
Light	GU10 Halogen	GU10 Halogen	ES Bulb	ES Bulb
Total Wattage	1180W	635W	630W	90W
Light Wattage	50W	50W	60W	60W
Switch Plate	4 sw. (supplied)	3 sw. (supplied)	3 sw. (supplied)	2 sw. (supplied)
Warranty	5 Years	5 Years	5 Years	5 Years

Performance

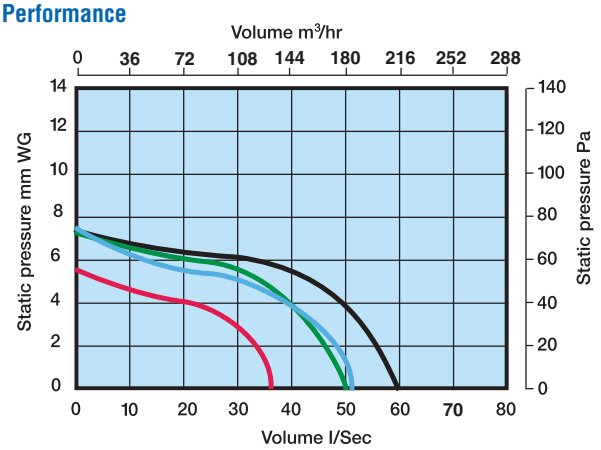

WAIMAKARIRI DISTRICT COUNCIL
Plans and specifications APPROVED in accordance with the Building Act 2004, clause 49 and the Building Regulations 1992, Clause 3
170037 13/03/2017 petert

Key

- PS Heat 'n Vent 4
- PS Heat 'n Vent 2
- Heat n Vent 2
- Light n Vent

Note: Performance tested with 3 metres of duct and one bend (normal installation)

Consent Issued: BC170037

IN-LINE FAN KITS - SF Shower Fan Models

GENERAL INFORMATION

Models	Grille Cut-Out	Interior Grille	Exterior Grille	Duct Type	Length of Duct included
SF100	115mm	White Eggcrate	White Fixed Louvre	Flexible PVC	3m supplied (should not be extended)
SF200	115mm	White Eggcrate	White Fixed Louvre	Flexible Alum.	3m supplied (can be extended up to 6m)
SF125	140mm	White Eggcrate	White Fixed Louvre	Flexible PVC	4m supplied (should not be extended)
SF150	160mm	White Eggcrate	White Fixed Louvre	Flexible PVC	5m supplied (can be extended up to 12m)

DIMENSION INFORMATION

Models	A	B	C	D	E
SF100	130	155	90	100	27
SF200	155	100	100	195	258
SF125	150	155	99	118	27
SF150	200	143	170	185	-

Dimensions - SF100/SF125

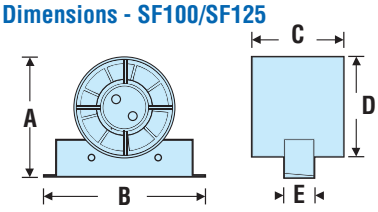

Dimensions - SF200

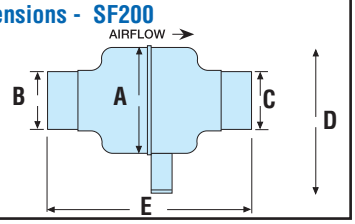

Dimension - SF150

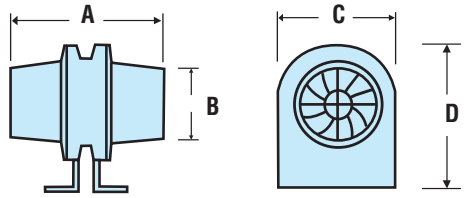

TECHNICAL SPECIFICATION

Models	SF100	SF200	SF125	SF150
Fan	ID100	CFD200	ID125	Hyper
Power	220 - 240V	220 - 240V	220 - 240V	220 - 240V
Fan Performance	23l/s, 85m³/hr	31l/s, 110m³/hr	36l/s, 130m³/hr	89l/s, 320m³/hr
Fan Wattage	20W	45W	25W	38W
Maximum Pressure	20Pa	120Pa	35Pa	135Pa
Fan Speed	2400 rpm	1400 rpm	2000rpm	2650 rpm
Sound Level	41 dB(A)	45 dB(A)	41 dB(A)	46 dB(A)
Max Operating Temp	40°C	40°C	40°C	70°C
IP Rating	IPX4	IPX4	IPX4	IPX2

Performance - SF100

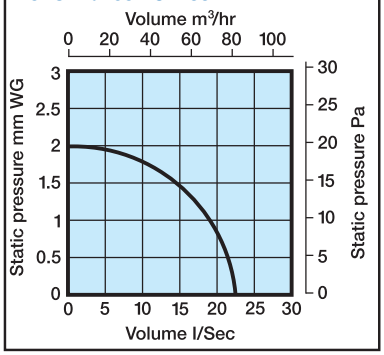

Performance - SF200

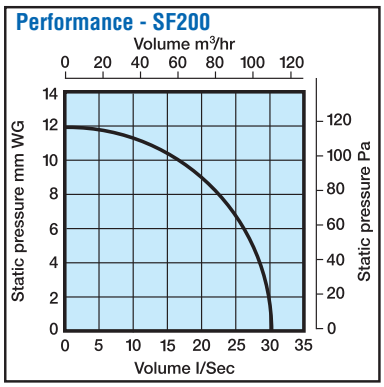

Performance - SF125

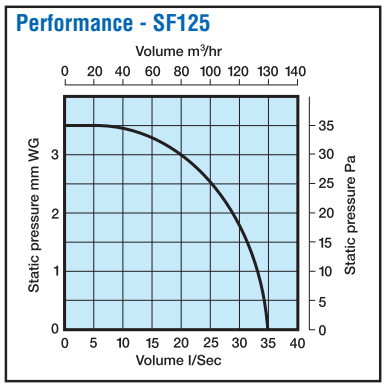

Performance - SF150

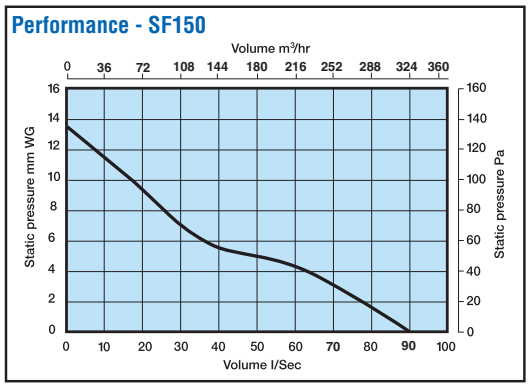

Note: PERFORMANCE - ID Fans maximum fan performance stated, this can vary depending on the length of ducting used.

Consent Issued BC170037

BC170037

Figure 68: General pipe penetration
Paragraph 9.1.9.3, Figure 126

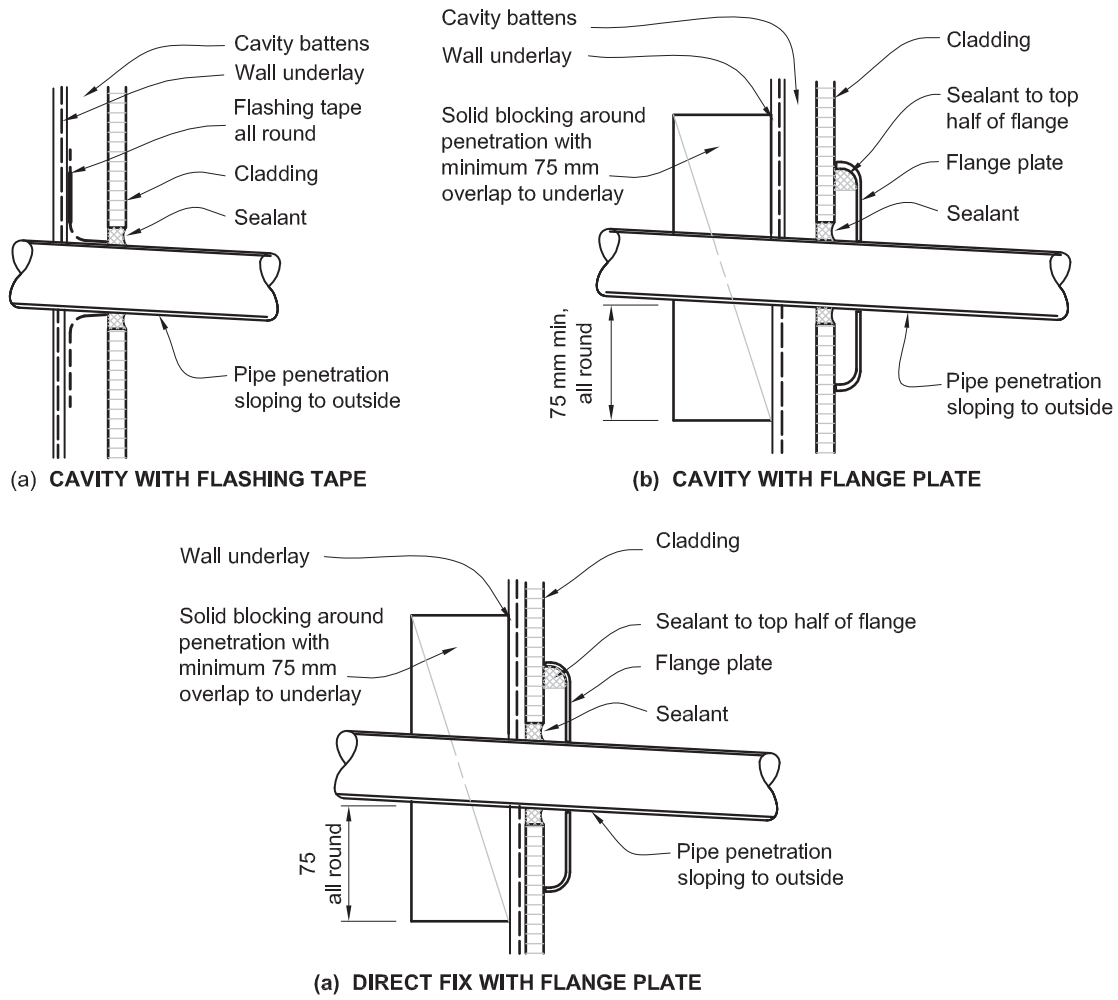

Amend 5 Aug 2011

WAIMAKARIRI DISTRICT COUNCIL
Plans and specifications APPROVED in accordance with the Building Act 2004, clause 49 and the Building Regulations 1992, Clause 3
170037 13/03/2017 petert

Amend 5 Aug 2011

Amend 5 Aug 2011

COMMENT:
Where possible, pipe penetrations, meterboxes and similar penetrations should be located in sheltered areas of the *building*, such as a porch, or be installed behind a weatherproof glazed panel.

Consent Issued BC170037

BC170037

WAIMAKARIRI DISTRICT COUNCIL
Plans and specifications APPROVED in accordance with the Building Act 2004, clause 49 and the Building Regulations 1992, Clause 3
170037 13/03/2017 petert

8.2.7 Penetrations

Penetrations shall be flashed as shown in Figure 29 to Figure 31.

Amend 5 Aug 2011

Holes in tiles for pipe penetrations shall be machine-cut to minimise the size of the hole.

Figure 29: Pipe penetration for masonry tile
Paragraph 8.2.7

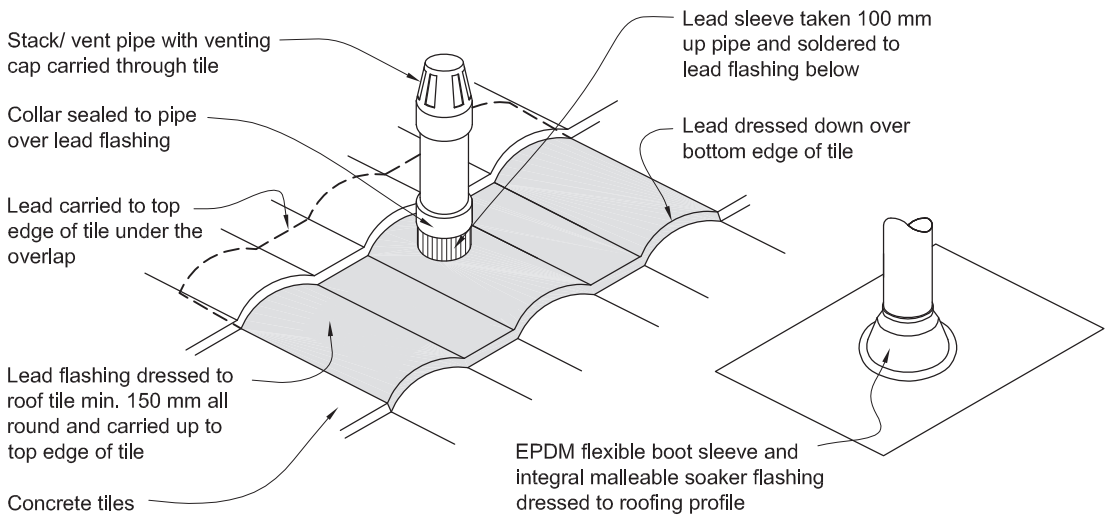

Amend 2 Jul 2005

Amend 5 Aug 2011

Building Consent 170037
Received 16/2/17

Consent Issued BC170037

8.3.9 Gutters, ridges, barges and fascias

Gutters, ridges, barges and fascias shall be as shown in Figures 34–37.

Refer to Paragraph 5.2 for termination of *roofs* against *wall claddings*.

Amend 5
Aug 2011

8.3.10 Roof penetrations

Pipe penetrations shall be flashed using *EPDM flashings* similar to that shown for masonry tiles, Figure 29.

Amend 5
Aug 2011

COMMENT:
Use purpose-made preformed rooflights and ventilators supplied by the manufacturer of the tiles where available.

Fixing Specs. For Windsor Sectional Doors

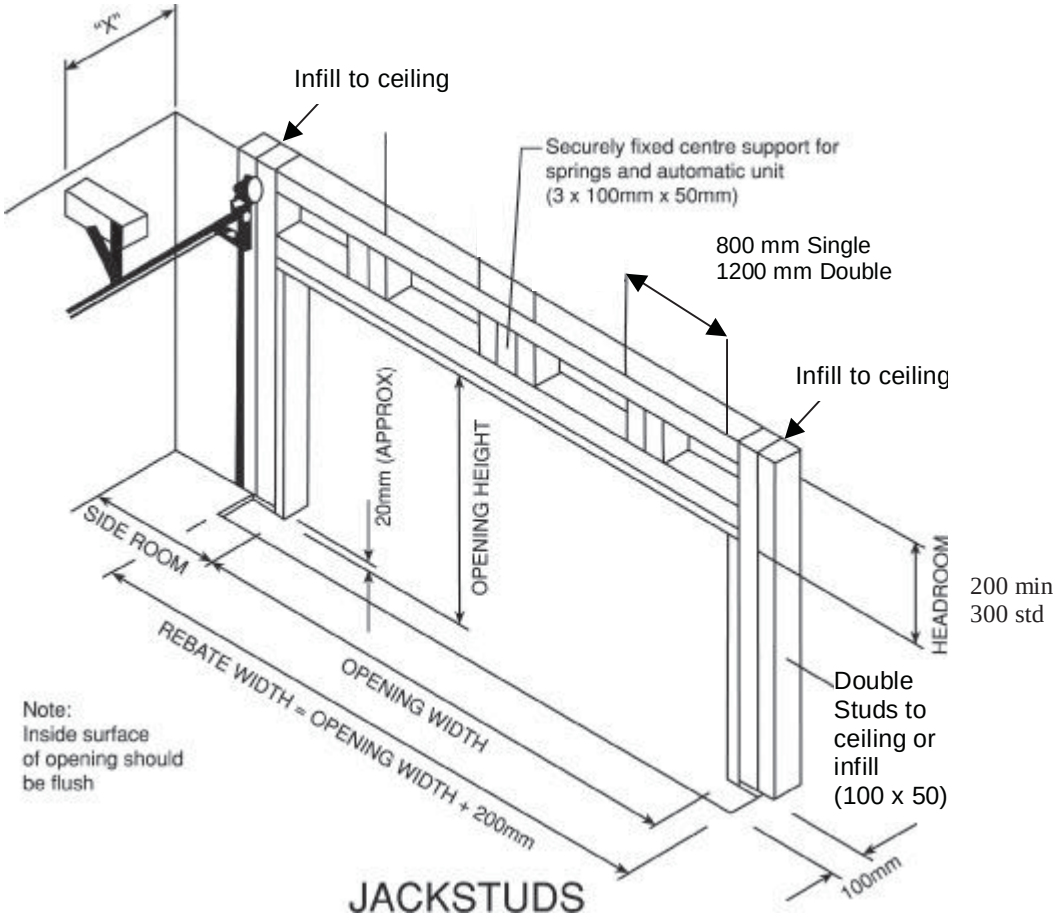

Note: If call back required due to incorrect fixings a surcharge of $50 will be added to your account

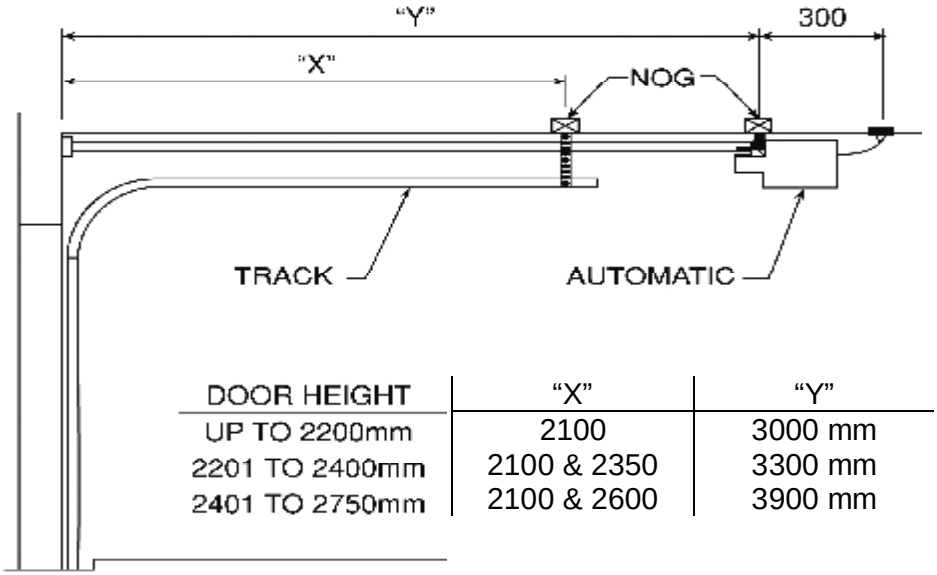

DOOR HEIGHT	"X"	"Y"
UP TO 2200mm	2100	3000 mm
2201 TO 2400mm	2100 & 2350	3300 mm
2401 TO 2750mm	2100 & 2600	3900 mm

Consent Issued BC170037

BC170037

WAIMAKARIRI DISTRICT COUNCIL
Plans and specifications APPROVED in accordance with the Building Act 2004, clause 49 and the Building Regulations 1992, Clause 3
170037 13/03/2017 petert

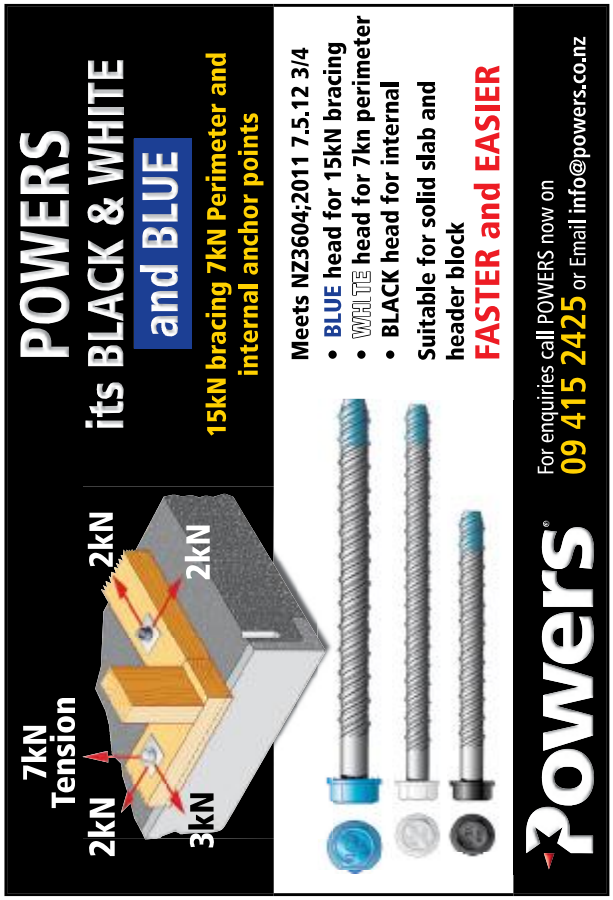

Consent Issued BC170037

INTERNAL LOAD BEARING
ON CONCRETE FLOOR SLABS

WAIMAKARIRI DISTRICT COUNCIL
Plans and specifications APPROVED in accordance with the Building Act 2004, clause 49 and the Building Regulations 1992, Clause 3
170037 13/03/2017 petert

- ★ Covers floor thickening and supporting stud requirements.
- ★ Covers floor slabs on buildings complying with NZS 3604:2011.
- ★ All concrete slabs to be constructed as per NZS 3604:2011.
- ★ Thickening requirements apply to reinforced floor slabs.
- ★ Provides solutions for stud requirements where point loads exceed 10 kN.
- ★ All slabs assumed to be supported on soils that have Ultimate Bearing Capacity of 300 kPa ($Ø_b$=0.50).

© Copyright 2011 MiTek Holdings, Inc.
All rights reserved.

Establishing Thickening & Stud Requirements

Consent Issued BC170037

1. Establish the type of load applied to the floor as being either a UDL (uniformly distributed load) or a concentrated load. Girder trusses will always give concentrated loads and a run of two or more trusses with the same loads will give a UDL.

2. Establish the maximum load value via the MiTek 20/20® Truss Design Software by using the Truss Bearings Exceeding 10 kN Report (see example below). Choose the maximum DOWN value in kN.

3. Go to the Slab Thickening & Stud Requirement Table on page 3 and choose from the appropriate section; either no change for up to 10 kN, FP1 and FS1 for up to 20 kN, or FP2 and FS2 for up to 30 kN.

4. Choose from the selection of stud options (height, centres and grade).

5. Apply the relevant slab and stud requirements as specified and detailed on page 3.

6. Where the maximum positive bearing reaction exceeds 10 kN (uplift), refer to MiTek for Special Design.

MiTek 20/20® Example Selection

TRUSS BEARINGS EXCEEDING 10 kN REPORT

Truss List

Legend: ? = input only, ~~Txx~~ = failed design, Unmarked trusses = designed successfully

Critical Trusses	Qty	Span (mm)	Joint	Bearing Reactions (kN) Down	Uplift
GT01	1	8000	J	16.177	7.292

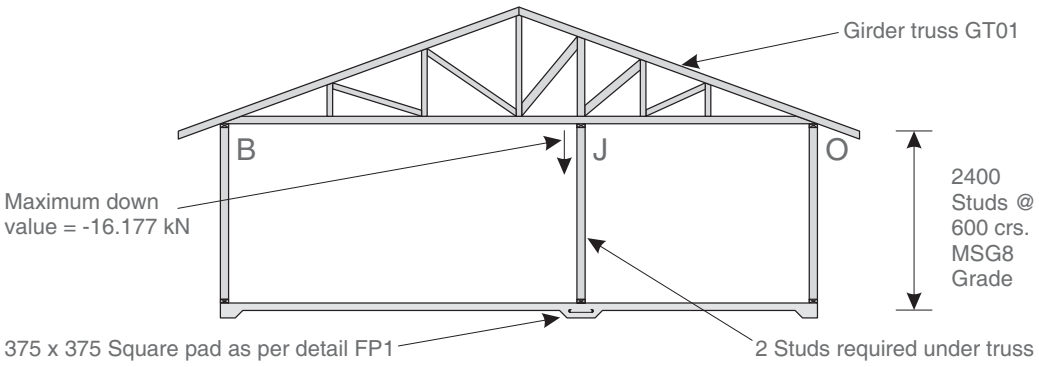

SINGLE STUD OPTION

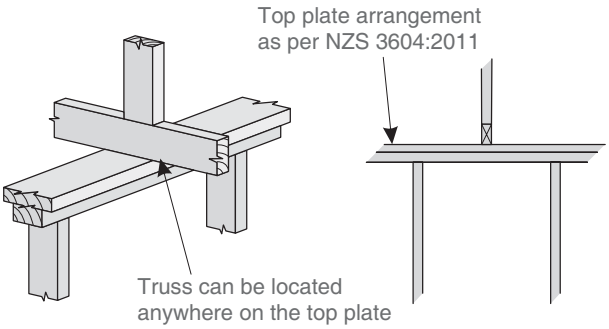

MULTIPLE STUD OPTION

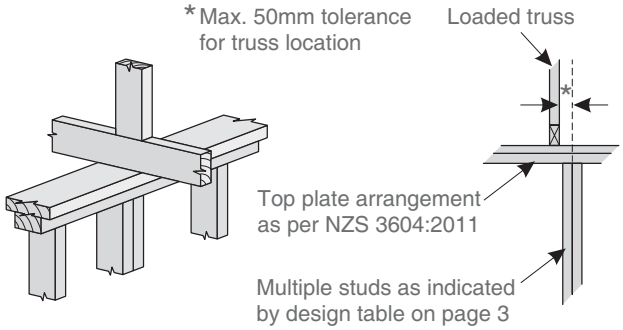

© Copyright 2011 MiTek Holdings, Inc.
All rights reserved.

Slab Thickening & Stud Requirement Table

Consent Issued BC170037

CONSTRUCTION SPECIFICATIONS

Max. truss crs. @ 1200mm, Min. truss crs. @ 600mm.
Assume walls are fully lined on at least one face.
Assume full bearing on top plate (i.e. no eccentric loading).

TRUSS BEARING REACTION	SLAB THICKENING DETAIL		STUD REQUIREMENTS UNIFORM DIST. LOADS OR CONCENTRATED LOADS		
	CONCENTRATED LOAD	UNIFORM DIST. LOAD	STUD HEIGHT	STUD REQUIREMENTS	
Bearing reaction up to & including 10 kN	STANDARD reinforced slab floor as per NZS 3604:2011	STANDARD reinforced slab floor as per NZS 3604:2011	2400	Refer to NZS 3604:2011	
			2700		
			3000		
			STUD HEIGHT	NO. OF STUD UNDER TRUSS	MIN. TIMBER SIZE
Bearing reaction up to & including 20 kN	TYPE FP1 375 x 375 PAD	TYPE FS1 300 STRIP THICKENING	2400	2	90 x 35
			2700	2	90 x 45
			3000	3	90 x 45
			STUD HEIGHT	NO. OF STUD UNDER TRUSS	MIN. TIMBER SIZE
Bearing reaction up to & including 30 kN	TYPE FP2 450 x 450 PAD	TYPE FS2 450 STRIP THICKENING	2400	3	90 x 45
			2700	3	90 x 45
			3000	4	90 x 45

TIMBER SPECIFICATIONS

Timber properties based on NZS 3603:1993 Amendment No.4 March 2005.
Minimum grade specified is SG8 unless otherwise noted.
For SG6 use the studs for the next highest category.
i.e. - For loads up to 10 kN select studs from the 20 kN table.
- For loads up to 20 kN select studs from the 30 kN table.
- For loads above 20 kN Special Design is required.

* Note: The stud requirement for 20 kN & 30 kN bearing reactions can be applied to external walls as well.

Slab Thickening Details

CONCRETE PAD OPTIONS
(for concentrated loads)

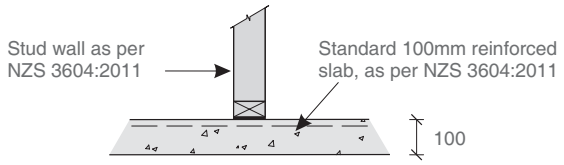

STANDARD 100mm SLAB

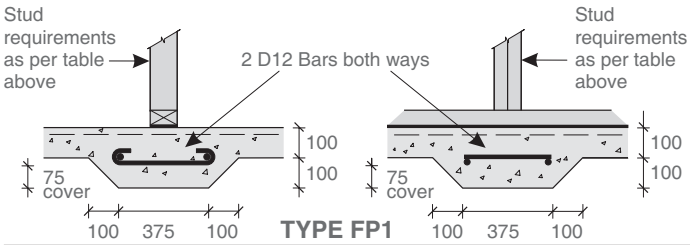

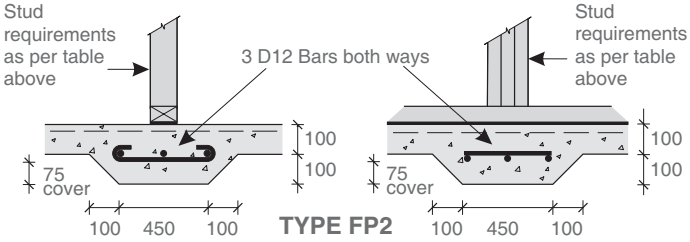

CONTINUOUS CONCRETE THICKENING OPTIONS
(for uniformly distributed loads)

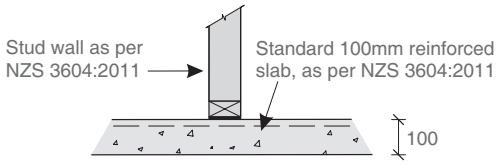

STANDARD 100mm SLAB

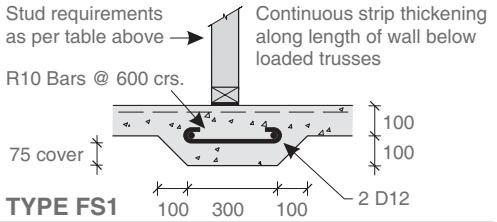

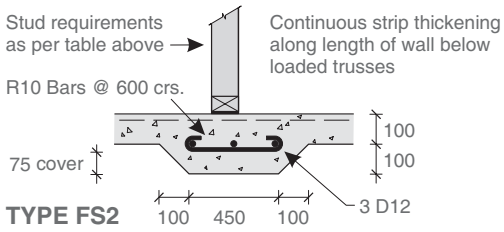

NOTE: FP = Foundation Pad FS = Foundation Strip

© Copyright 2011 MiTek Holdings, Inc.
All rights reserved.

Retro Fitted Load Bearing Option

Consent Issued BC170037

BC170037

Note:

- Covers slab details where no thickening has been built into the foundation.
- For loads exceeding 10 kN install bottom lintel (300 x 100) between two adjacent studs as detailed below. For loads 30 kN or more, special design is required.
- Ensure the studs comply with requirements on page 3 and are located directly under concentrated loads. This may require on-site installation of these studs.

Concentrated Load

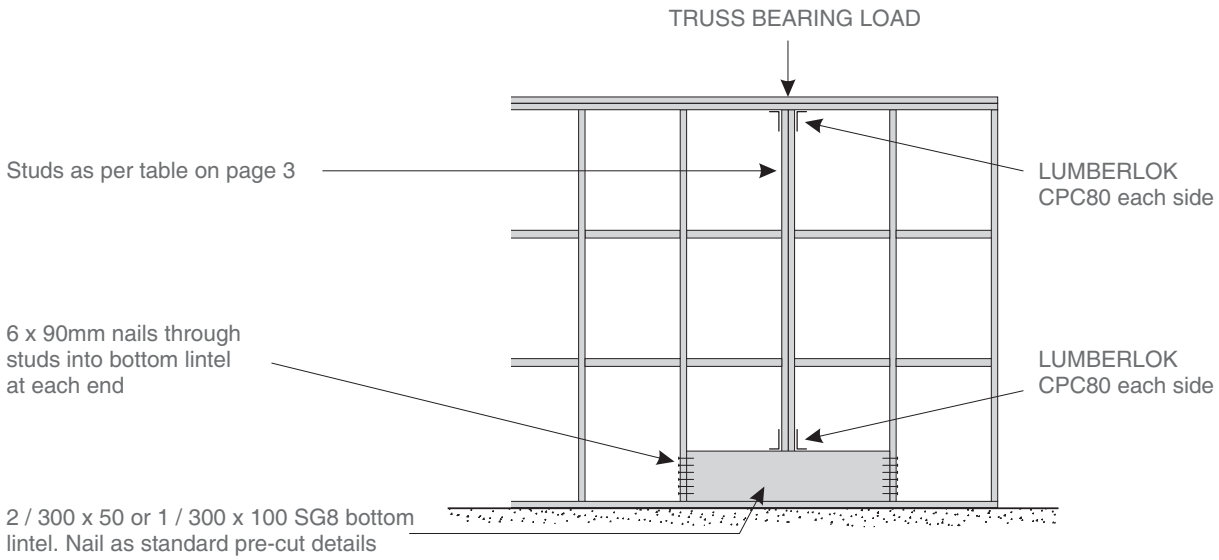

Uniformly Distributed Loads

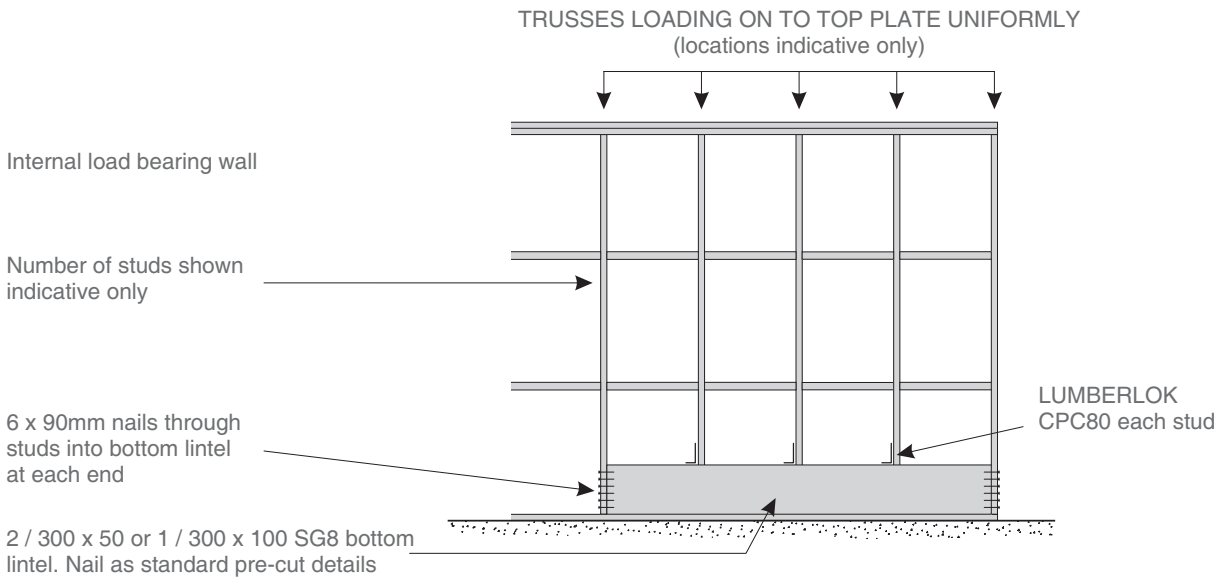

© Copyright 2011 MiTek Holdings, Inc.
All rights reserved.

Consent Issued BC170037
WAIMAKARIRI DISTRICT COUNCIL
Plans and specifications APPROVED in accordance
with the Building Act 2004, clause 49 and the Building
Regulations 1992, Clause 3
170037 13/03/2017 petert

BC170037

James Hardie
a smarter way™

Linea®
WEATHERBOARD

Technical Specification

MARCH 2015 | NEW ZEALAND

Consent Issued BC170037

BC170037

WAIMAKARIRI DISTRICT COUNCIL
Plans and specifications APPROVED in accordance with the Building Act 2004, clause 49 and the Building Regulations 1992, Clause 3
170037 13/03/2017 petert

Contents

1 APPLICATION AND SCOPE 3

1.1 Application 3
1.2 Scope 3
1.3 Details 3
1.4 Specific Design 3

2 DESIGN 3

2.1 Compliance 3
2.2 Responsibility 3
2.3 Site and Foundation 3
2.4 Ground Clearances 4
2.5 Moisture Management 4
2.6 Structure 4
2.7 Wind Loading 4
2.8 Structural Bracing 4
2.9 Fire Rated Walls 4
2.10 Energy Efficiency 4

3 FRAMING 5

3.1 General 5
3.2 Timber Grade 5
3.3 Durability 5
3.4 Frame Construction 5
3.5 Tolerances 5

4 PREPARATION 6

4.1 Building Underlay or HomeRAB Pre-Cladding 6
4.2 Rigid Air Barrier 6
4.3 Flashing 6
4.4 Vent Strip 6
4.5 Cavity Battens 6
4.6 Intermediate Support 6
4.7 Corners 6
4.8 Junctions and Penetrations 6

5 FIXING LINEA® WEATHERBOARD 7

5.1 General 7
5.2 Fastener Durability 7
5.3 Nail Sizes and Fixing Method 7
5.4 Gun Nailing 8

6 JOINTING 8

7 FINISHING 8

7.1 Preparation and Priming 8
7.2 Sealants 8
7.3 Painting 8

8 STORAGE AND HANDLING 8

9 MAINTENANCE 8

10 PRODUCT INFORMATION 9

10.1 Manufacturing and Classification 9
10.2 Trim 9
10.3 Durability 9
10.4 Product Sizes and Mass 9
10.5 Size and Weight 9

11 SAFE WORKING PRACTICES 10

12 PRODUCT SIZES 11

13 ACCESSORIES 12

14 DETAILS 14

PRODUCT WARRANTY 47

WE VALUE YOUR FEEDBACK

To continue with the development of our products and systems, we value your input. Please send any suggestions, including your name, contact details, and relevant sketches to:

Ask James Hardie™
Fax 0800 808 988
literaturefeedback@jameshardie.co.nz

CODEMARK™ 30018

Consent Issued BC170037

1 Application and scope

1.1 APPLICATION

Linea® Weathᵉrboard is a 16mm thick, pre-primed bevel back fibre cement weatherboard and is classified as lightweight wall cladding suitable for residential and light commercial construction using timber framed external walls. Linea Weatherboard is available in 135mm, 150mm and 180mm widths.

James Hardie also has available:

- Axent™ Fascia in two widths. Axent Fascia is a 16mm thick, pre-primed fibre cement product designed to accommodate James Hardie soffit linings.
- Axent™ Trim comes in a variety of widths for use as decorative trims around openings and external corners. Axent Trim is a 16mm thick, pre-primed fibre cement product.

If you are a specifier
Or other responsible party for a project ensure that the information in this document is appropriate for the application you are planning and that you undertake specific design and detailing for areas which fall outside the scope of these specifications.

If you are an installer
Ensure that you follow the design, moisture management principles, associated figures and material selection provided by the designer and this James Hardie Technical Specification.

All the details provided in this document must be read in conjunction with the specifiers specification.

Make sure your information is up to date
When specifying or installing James Hardie products, ensure you have the current manual. If you're not sure you do, or, if you need more information, visit www.jameshardie.co.nz or Ask James Hardie on 0800 808 868.

1.2 SCOPE

This specification covers the use of Linea Weatherboard on buildings that fall within the scope limitations of the New Zealand Building Code (NZBC) Acceptable Solution E2/AS1, Paragraph 1.1.

This specification includes the use of Linea Weatherboard in both direct to stud and cavity construction method and must be read in conjunction with the current BRANZ Appraisals for Linea Weatherboard.

This specification also covers the use of Linea Weatherboard in cavity construction for specific design projects (SED) subject to a wind pressure of 2.5kPa (ULS) maximum. This document is intended for use by architects, designers, specifiers or builders who are involved in specifying Linea Weatherboard. The document also serves the purpose of an installation manual for this product.

1.3 DETAILS

Various Linea Weatherboard details are provided in the Details section of this document. This specification and details in CAD file are also available to download from our website at www.jameshardie.co.nz.

1.4 SPECIFIC DESIGN

For use of Linea Weatherboard outside this published scope, the architect, designer or engineer must undertake specific design.

For advice on designs outside the scope of this specification, Ask James Hardie on 0800 808 868.

2 Design

2.1 COMPLIANCE

CODEMARK™ 30018

Linea Weatherboard direct fixed and cavity cladding has been issued a CodeMark certificate number GM-10-30018 which confirms Linea Weatherboard is deemed to comply with the requirements of NZBC. Please refer to our website www.jameshardie.co.nz for a copy of the CodeMark certificate. Linea Weatherboard also has a BRANZ Appraisal number 446 (2010) and 447 (2010) at www.branz.co.nz or www.jameshardie.co.nz.

2.2 RESPONSIBILITY

The specifier or other party responsible for the project must ensure that the information and details in this specification are appropriate for the intended application and that additional detailing is performed for specific design or any areas that fall outside the scope of this technical specification. For applications outside the scope of this literature and figures which are not provided herein, the architect, designer or engineer must undertake specific design and it should be ensured that the intent of their design meets the requirements of the NZBC.

All dimensions shown are in millimetres unless noted otherwise. All New Zealand Standards referenced in this manual are current edition and must be complied with.

James Hardie conducts stringent quality checks to ensure that any product manufactured falls within our quality spectrum. It is the responsibility of the builder to ensure that the product meets aesthetic requirements before installation. James Hardie will not be responsible for rectifying obvious aesthetic surface variations following installation.

2.3 SITE AND FOUNDATION

The site on which the building is situated must comply with the NZBC Acceptable Solution E1/AS1 'Surface Water'. Foundation design must comply with the requirements of NZS 3604 'Timber Framed Buildings' or be as per specific engineering design. The grade of adjacent finished ground must slope away from the building to avoid any possibility of water accumulation in accordance with the NZBC requirements.

Consent Issued BC170037

BC170037

WAIMAKARIRI DISTRICT COUNCIL
Plans and specifications APPROVED in accordance with the Building Act 2004, clause 49 and the Building Regulations 1992, Clause 3
170037 13/03/2017 petert

2.4 GROUND CLEARANCES

The clearance between the bottom edge of cladding and paved/unpaved ground must comply with section 9.1.3 of E2/AS1. The finished floor level must also comply with these requirements. These clearances must be maintained throughout the life of the building.

Linea Weatherboards must overhang the bottom plate on a concrete slab by a minimum of 50mm as required by the NZBC Acceptable Solution, E2/AS1 Table 18.

On the roofs and decks the minimum clearance must be 50mm.

Do not install external cladding such that it may remain in contact with water or ground.

2.5 MOISTURE MANAGEMENT

It is the responsibility of the specifier to identify moisture related risks associated with any particular building design.

Wall construction design must effectively manage moisture, considering both the interior and exterior environments of the building, particularly in buildings that have a higher risk of wind driven rain penetration or that are artificially heated or cooled. Walls shall include those provisions as required by the NZBC Acceptable Solution E2/AS1 'External Moisture'. In addition, all wall openings, penetrations, junctions, connections, window sills, heads and jambs must incorporate appropriate flashings for waterproofing. The other materials, components and installation methods used to manage moisture in the walls, must comply with the requirements of relevant standards and the NZBC. For information in relation to designing for weathertightness, refer to BRANZ and the Ministry of Business Innovation & Employment (MBIE) updates on the following websites, respectively www.branz.co.nz and www.dbh.govt.nz.

2.6 STRUCTURE

Timber framing must comply with NZS 3604 for buildings or parts of buildings within the scope limitations of NZS 3604. Buildings or parts of buildings outside the scope of NZS 3604 must be to a specific engineering design in accordance with NZS 3603 and AS/NZS 1170. Where specific engineering design is required, the framing stiffness must be equivalent to or more than the framing provisions of NZS 3604. In all cases stud spacing must not exceed 600mm centres maximum for buildings designed to NZS 3604 and 400mm centres maximum for specific engineering design buildings subject to design wind pressures higher than 1.5kPa.

For timber frame walls longer than 12m, it is best practice to allow for construction joints to accommodate movements generated due to timber shrinkage or deflection etc

2.7 WIND LOADING

Linea Weatherboard cladding is suitable for use in all wind zones as defined in NZS 3604 and is also suitable for use in SED wind pressures up to 2.5kPa (ULS).

For wind pressures higher than those mentioned above, contact James Hardie at 0800 808 868 for assistance.

2.8 STRUCTURAL BRACING

Linea Weatherboard direct fixed installed as per Linea Weatherboard specific bracing details will provide bracing for buildings designed and constructed in accordance with NZS 3604. The Linea Weatherboard bracing systems have been independently tested by SCION using direct fixed construction. The following range of bracings can be achieved

- Wind 75 – 130 BU'S/m
- Earthquake 67 – 101 BU'S/m

Refer to the James Hardie Bracing Design Manual for details.

2.9 FIRE RATED WALLS

Walls clad with Linea Weatherboard using a direct fix or cavity construction method can achieve fire ratings of up to 90/90/90 when constructed in accordance with the James Hardie 'Fire and Acoustic' Design Manual. Linea Weatherboard must be face fixed for Fire Rated applications.

Refer to Fire and Acoustic Design Manual for further information about fire rated systems.

2.10 ENERGY EFFICIENCY

External walls constructed using Linea Weatherboard as per this technical specification, using bulk insulation, where the area of glazing is 30% or less of the total wall area, complies with the minimum R-value requirements for walls as per the NZBC Acceptable Solution H1/AS1 (NZBC Clause H1 Energy Efficiency), Replacement Table 1. To meet the minimum thermal insulation requirements for the construction, the bulk insulation as specified in Table 1 must be used. This insulation may be substituted with insulation material having higher R-values. The thermal insulation of a wall is affected when the depth of the timber framing is increased or decreased or stud spacing is decreased. The calculation used in Table 1 is based on a timber framing size 90 x 45mm and an internal lining material such as James Hardie Villaboard® Lining or a 10mm plasterboard.

Table 1

Insulation capability		
Climate Zone	**Construction R-Value Requirement**	**Minimum R-Value of Insulation Required**
1 and 2	1.9 m2 °C/W	#R2.0
3	2.0 m2 °C/W	#R2.2

Total construction R-Value depends on the insulation material used and the framing ratio. The insulation material R-Values specified in this table are for studs spaced at 600mm c/c and nogs spaced at 800mm c/c.

To achieve higher construction R-Values the wall insulation material must be replaced with an insulation material having higher R-Values to suit the requirements.

For further guidance on insulation requirement refer to current edition of 'House Insulation Guide' published by BRANZ.

3 Framing

3.1 GENERAL

This Linea Weatherboard technical specification is only suitable for timber-framed buildings. Other framing materials are outside the scope of this specification.

For Steel Framing refer to James Hardie Claddings Installation to Steel Framing Technical Supplement.

3.2 TIMBER GRADE

Timber must be graded in accordance with NZS 3631 'New Zealand Timber Grading Rules'. The timber grade to be used must be in accordance with NZS 3604 requirements.

3.3 DURABILITY

To comply with the NZBC requirements the external framing must be treated to a minimum H1.2 treatment. Refer to the NZBC Acceptable Solution B2/AS1 Durability for further information about the durability requirements. For timber treatment information refer to NZS 3602 (Timber and Wood-Based Products for use in Buildings) and NZS 3640 (Chemical Preservation of Round and Sawn Timber) for minimum timber treatment selection and treatment requirements. Also refer to framing manufacturer's literature for further guidance on timber selection.

Framing must be protected from moisture at sites in accordance with the recommendations of framing manufacturers.

Note: refer to NZS 3602 for information about the allowable moisture content in timber.

3.4 FRAME CONSTRUCTION

For buildings within the scope of NZS 3604 the framing sizes and set-out must comply with NZS 3604 with stud, nog/dwang centres as required by this specification.

In case of gable end trusses sitting on top plates of external wall frame, the frame size must comply with the minimum timber sizes stipulated for wall frames in section 8 of the NZS 3604.

3.4.1 Direct fixed construction method

The following framing must be provided for direct fixed construction method:

- Studs must be provided at 600mm centres maximum.
- Nogs must be provided at 1200mm centres maximum.
- Double studs are required at internal corners.
- Extra packers may be required at external corners.
- Extra studs are required for aluminium internal corner sections.

3.4.2 Cavity construction method

The following framing must be provided for cavity construction method:

- When studs are at 600mm centres the nogs must be provided at 800mm centres maximum.
- When studs are at 400mm centres the nogs may be provided at 1200mm centres maximum.
- Double studs are required at internal corners.
- Extra packers may be required at external corners.
- Extra studs are required for aluminium internal corner sections.

3.4.3 Specific Engineering Design (SED)

For EH wind zone and specific engineering design projects the timber framing is required to be designed in accordance with NZS 3603 and AS/NZS 1170. The minimum framing sizes and layout must comply with this specification.

- Stud spacing 400mm centres maximum
- Nog spacing 1200mm centres maximum
- Other requirements as per 3.5.2 above

3.5 TOLERANCES

In order to achieve an acceptable wall finish, it is imperative that framing is straight and true. Framing tolerances must comply with the requirements of NZS 3604. All framing must be made flush.

Consent Issued BC170037

BC170037

4 Preparation

WAIMAKARIRI DISTRICT COUNCIL
Plans and specifications APPROVED in accordance with the Building Act 2004, clause 49 and the Building Regulations 1992, Clause 3
170037 13/03/2017 petert

4.1 BUILDING UNDERLAY OR HOMERAB PRE-CLADDING

Building underlay must be provided as per the requirements of the NZBC Acceptable Solution E2/AS1 'External Moisture' Table 23. The building underlay must be fixed in accordance with E2/AS1 and the underlay manufacturer's recommendations. Walls which are not lined on the inside face e.g. garage walls or gable ends must include a rigid sheathing or an air barrier behind the cladding which complies with the requirements of the NZBC Acceptable Solution E2/AS1 Table 23. HomeRAB Pre-Cladding is suitable for use in these applications. It must be installed in accordance with James Hardie Rigid Air Barriers installation manual.

4.2 RIGID AIR BARRIER

For EH wind zone or Specific Engineering Design (SED) projects where the design wind pressures are between 1.5kPa (ULS) and 2.5kPa (ULS), RAB Board (6mm) must be used. Refer to James Hardie Rigid Air Barriers installation manual for information regarding its installation.

4.3 FLASHING

All wall openings, penetrations, intersections, connections, window sills, heads and jambs must be flashed prior to weatherboard installation. Please refer to moisture management requirements in Clause 2.5. The building underlay must be appropriately incorporated with penetration and junction flashings. Materials must be lapped in such a way that water tracks down to the exterior on the face of building underlay. James Hardie will assume no responsibility for water infiltration within the wall due to poor installation of flashings or building underlays. The selected flashing materials must comply with the durability requirements of Table 20 of the NZBC Acceptable Solution E2/AS1.

4.4 VENT STRIP

The James Hardie uPVC cavity vent strip must be installed at the bottom of all walls constructed using the drained and ventilated cavity construction method. James Hardie uPVC vent strip has an opening area of 1000mm2/m length. It is important that the openings in the vent strip are kept clear and unobstructed to allow free drainage and ventilation of cavities.

4.5 CAVITY BATTENS

Buildings with a risk score of 13-20 calculated in accordance with the NZBC Acceptable Solution E2/AS1 Table 3 require Linea Weatherboards to be installed on a cavity.

The cavity battens provide airspace between the frame and cladding and are considered a "packer" only in this specification.

The timber battens must be minimum H3.1 treated in accordance with NZS 3640 (Chemical Preservation of Round and Sawn Timber) to comply with the durability requirements of B2/AS1.

Cavity battens must comply with E2/AS1 and:

- be minimum 18mm thick.
- be minimum as wide as the width of studs.
- be fixed by the cladding fixings to the main framing through the building underlay.
- fix cavity battens to studs at maximum 600mm centres.
- until claddings are fixed the battens need only to be tacked to framing with 40 x 2.8mm nails at 800mm centres maximum.

(Batten fixing is required temporarily to keep them straight on the wall during construction.)

4.6 INTERMEDIATE SUPPORT

Where studs are at 600mm centres an intermediate means of restraining the building underlay and insulation from bulging into the cavity shall be installed. An acceptable method to achieve this is using one of the following:

- intermediate cavity batten between the studs.
- 75mm galvanised mesh.
- polypropylene tape at 300mm centres fixed horizontally and drawn taut.

No intermediate supports are required:

- where studs are at maximum 400mm centres; or,
- when rigid sheathings instead of building underlays are used.

4.7 CORNERS

Anticipated joist shrinkage must be allowed for in the design process. Do not run trims or aluminium extrusions continuously across solid floor joists. There are a number of options to select from when detailing external corners:

- 90° corner soaker in aluminium, copper or stainless steel. Refer to Figures 7 and 33.
- 135° corner soaker 180mm aluminium, contact James Hardie
- Box corners using Axent Trim. Refer to Figures 3, 4 and 30.
- Mitred corners to weatherboards. Refer to Figures 5 and 31.
- Aluminium boxed corners. Refer to Figures 6 and 32.

There are a number of options to select from when detailing internal corners:

- Scribed corner. Refer to Figures 8 and 34.
- 90° or 135° Aluminium W-mould. Refer to Figures 9, 10, 35 and 36.

4.8 JUNCTIONS AND PENETRATIONS

Refer to Clause 2.5 of this specification for moisture management requirements. All windows and doors must be detailed as per the requirements of this specification. James Hardie has developed the window details for Linea Weatherboards which meet the requirements of E2 'External Moisture', an approved document of the NZBC. Refer to Figures 11 to 22 and 38 to 51.

5 Fixing Linea Weatherboard

5.1 GENERAL

The horizontal lap of Linea Weatherboards must be 30mm minimum. In certain scenarios you may require to creep up the lap. This must not exceed 33mm. Linea Weatherboards must be kept dry whilst in storage prior to and during fixing. Cut ends which are exposed after installation or where sealant is applied to the boards such as slimline box corners, internal corners, mitred external corners etc, must be primed prior to installation. Dust and loose material must be removed before priming.

A minimum H3.1 treated timber cant strip must be provided to support the bottom board on the wall. Refer to Figure 1 and Figure 26.

5.2 FASTENER DURABILITY

Fasteners must meet the minimum durability requirements of the NZBC. NZS 3604 specifies the requirements for fixing's material to be used in relation to the exposure conditions and are summarised in Table 2.

Table 2

Exposure conditions and nail selection prescribed by NZS 3604

NAIL MATERIAL

Zone D *	Zone C outside sea spray zone and Zone B and Geothermal hot spots	Bracing — All zones
Grade 316 Stainless	Hot-dipped galvanised or 316 stainless	Grade 316 stainless

* (Zone C areas where local knowledge dictates that increased durability is required, appropriate selection shall be made) Microclimate conditions as detailed in NZS 3604, Paragraph 4.2.4 require SED.

Also refer to the NZBC Acceptable Solution 'E2/AS1' Table 20 and 21 for information regarding the selection of suitable fixing materials and their compatibility with other materials.

5.3 NAIL SIZE AND FIXING METHOD

Linea Weatherboards and Axent Trim must be fixed to timber with the types of nails specified in Tables 3 and 4, in accordance with the following requirements:

- Linea Weatherboard can either be face/exposed fixed or concealed fixed.
- Linea Weatherboard must be fixed into studs at maximum 600mm centres. Fixing centres to coincide with stud spacing. Refer to Figure 2 and 28.
- All concealed nails must be driven flush with the board surface.
- When concealed fixing Linea Weatherboards, nails must be driven under the lap of boards, except at all corners and vertical edges of openings where Linea Weatherboards must be face fixed. Refer to Figure 2 and Figure 29.
- Nails must be fixed 25mm from the end of the board when hand nailing. For gun nailing refer to Section 5.4.
- When using concealed fixing method, any gaps that may appear under the lap due to site conditions can be minimised by fixing a jolt head nail through the lap as per the exposed nailing method. Refer to Figure 2 and 29.
- When using concealed fixing method, Linea Weatherboard can also be tied together by face fixing through the lap using 32mm brad nails if desired.
- When using a rigid air barrier like HomeRAB Pre-Cladding or RAB Board, the cladding fixing nails must be increased in length equal to the thickness of the rigid air barrier.
- When face fixing Linea Weatherboard, the upper board must be pre-drilled before fixing with a jolt head nail.

Table 3

Nail requirements for Linea Weatherboards

DIRECT TO STUD FIXING

Concealed Nailing	
40 x 2.8mm HardieFlex™ nails	Finish flush with the board surface.
Face Nailing	
60 x 3.15mm jolt head nails	Hot-dipped galvanised jolt head nail with pre-drilling* through the top weatherboard.
	Stainless steel jolt head nail with pre-drilling* through the top weatherboard.

CAVITY FIXING

Concealed Nailing	
60 x 3.15mm HardieFlex™ nails	Finish flush with the board surface.
Face Nailing	
75 x 3.15mm jolt head nails	Hot-dipped galvanised jolt head nail with pre-drilling* through the top weatherboard.
	Stainless steel jolt head nail with pre-drilling* through the top weatherboard.
EH Wind Zone and SED Projects (1.5kPa - 2.5kPa Wind Pressure)	
Face Nailing	
90 x 4.0mm jolt head nail	Hot-dipped galvanised jolt head nail with pre-drilling** through the top weatherboard.
	Stainless steel shank jolt head nail with pre-drilling** through the top weatherboard.

Table 4

Nail requirements for trim

Single Thickness	60mm jolt head nails. If fixing over Linea Weatherboard use predrilled* 75 x 3.15mm jolt head nails.
Double Thickness	60mm jolt head nails.
Single plus packer	If fixing over Linea Weatherboard use 75 x 3.15mm jolt head nails through a pre-drilled* hole. When fixing to timber support use 60mm jolt head nails.

* Use a 3.0mm drill bit. ** Use a 3.5mm drill bit

Note: Special fixing arrangements are required for bracing and fire-resistance rated wall systems. For more information Ask James Hardie on 0800 808 868.

5.4 GUN NAILING

Linea Weatherboard can also be gun-nailed with a D head or RounDrive nail when concealed fixing method is used.

- Gun-nailing must not be used when Linea Weatherboard is used for bracing.
- Nails must be no closer than 50mm from the ends of boards when gun nailing is used — double studs will be required.
- Be minimum length and gauge as per Table 3.
- Be finished flush with surface of board.

6 Jointing

The ends of Linea Weatherboards are jointed off-stud by means of a tongue and groove joint. Tongue and groove joints may be located centrally between studs but no closer than 100mm from the edge of a stud. The joints must be staggered by 600mm minimum. Sealant must be provided in the tongue and groove joint.

7 Finishing

Note: Protective coating of Linea Weatherboard and Axent Trim is required in order to meet the durability requirements of the NZBC.

7.1 PREPARATION AND PRIMING

The Linea Weatherboard and Axent Trim must be dry before painting. Punch and fill all exposed nails a maximum of 2mm below the surface. Fill the hole with an exterior grade builders fill, allow to cure and sand smooth ready for priming. Prime the filled holes in accordance with paint manufacturer's specifications.

It is not recommended to seal under the lap of weatherboards as it helps circulation of air behind the weatherboard cladding.

7.2 SEALANTS

All sealants must demonstrate the ability to meet the relevant requirements of the NZBC and hold a current BRANZ Appraisal. Application and use of sealants must comply with manufacturer's instructions. Sealants, if coated, must be compatible with the paint system.

7.3 PAINTING

All Linea Weatherboards are pre-primed on their face and bottom edge with a factory applied acrylic base coat.

Linea Weatherboard must be painted within 90 days of installation. There is no restriction on the LRV of paint to be applied on the Linea Weatherboard. All exposed faces, including the top edges under the sills and bottom edges of Linea Weatherboard, Axent Trim and accessories must be finished with latex exterior paint system complying with any of parts 7, 8, 9, and 10 of AS 3730.

Dark coloured paints can be used on Linea Weatherboard and Trim. The dark colours in certain environments may fade over a period of time. Special paints/coatings are required in certain harsh environments.

Stainless steel soakers are generally left natural. For painting over stainless steel soakers, refer to paint manufacturer as special preparation and paints are required.

8 Storage and handling

Paint selection and the preparation required is dependant on paint chosen. Refer to the paint manufacturer for information before starting painting.

Linea Weatherboards and Axent Trim must be laid flat on a smooth level surface. To ensure optimum performance, store weatherboards under cover and keep dry prior to fixing. If the weatherboards should become wet, allow to dry thoroughly before fixing. Do not carry weatherboards on the flat, carry in the vertical position to avoid excessive bending.

9 Maintenance

The extent and nature of maintenance will depend on the geographical location and exposure of the building. It is the responsibility of the specifier to determine normal maintenance requirements to comply with NZBC Acceptable Solution B2/AS1. As a guide, it is recommended that basic normal maintenance tasks shall include but not be limited to:

- Washing down exterior surfaces every 6-12 months*,
- Re-applying exterior protective finishes**,
- Maintaining the exterior envelope and connections including joints, penetrations, flashings and sealants,
- Cleaning out gutters, blocked pipes and overflows as required,
- Pruning back vegetation close to or touching the building,
- The clearances between the bottom edge of Linea Weatherboard and the finished/unfinished ground must always be maintained.
- Stainless steel soakers used in extreme coastal conditions or in sea spray zones may show some signs of 'tea staining'. It is an aesthetic issue and to minimise staining soaker must be washed/polished frequently.

*Do not use a water blaster to wash down the cladding.

*In extreme coastal conditions or sea spray zones, wash every 3-4 months.

**Refer to your paint manufacturer for washing down and recoating requirements related to paint performance.

Consent Issued BC170037

BC170037

10 Product information

WAIMAKARIRI DISTRICT COUNCIL
Plans and specifications APPROVED in accordance with the Building Act 2004, clause 49 and the Building Regulations 1992, Clause 3
170037 13/03/2017 petert

10.1 MANUFACTURING AND CLASSIFICATION

James Hardie New Zealand is an ISO 9001 Telarc certified manufacturer. Linea Weatherboard and Axent Trim are manufactured to meet the requirements of AS/NZS 2908.2: 2000 'Cellulose-Cement Products', Linea Weatherboard has a classification of Type A Category 3 in accordance with this Standard. Linea Weatherboard is an advanced lightweight cement composite building product incorporating James Hardie proprietary Scyon technology.

Linea Weatherboard has a bevel back and tongue and groove at the ends for jointing. The bottom front edge of Linea Weatherboard is chamfered. The weatherboards are supplied pre-primed on their face and bottom edge with an acrylic primer.

Linea Weatherboards and Axent Trim are identified by the printing at regular intervals of the name Linea on the back face.

10.2 JAMES HARDIE TRIM

The Axent Trim, used for box corners, around windows and doors as well as special architectural features, is also made with the CLD technology and is supplied pre-primed with an acrylic primer.

10.3 DURABILITY

Linea Weatherboard and Axent Trim, when installed and maintained as per the technical specification, will meet the durability requirements for claddings as required in the NZBC Approved Document B2 'Durability'.

10.3.1 Resistance to moisture/rotting

Linea Weatherboard and Axent Trim have demonstrated resistance to permanent moisture-induced deterioration (rotting) and has passed the following tests in accordance with AS/NZS 2908.2:

- Water Permeability (Clause 8.2.2)
- Warm Water (Clause 8.2.4)
- Heat Rain (Clause 6.5)
- Soak Dry (Clause 8.2.5).

10.3.2 Control of External Fire Spread

Linea Weatherboard is tested as per Appendix C C7.1.1 and is classified as 'Non-Combustible Material' which is suitable for use as external wall cladding and complies with requirements of paragraph 5.8.1 of Clause C2 to C6 of the NZBC.

10.3.3 Alpine regions

In regions subject to freeze/thaw conditions, Linea Weatherboard must not be in direct contact with snow or ice build up for extended periods, e.g. external walls in alpine regions subject to snow drifts over winter.

The Linea Weatherboard has been tested in accordance with AS/NZS 2908.2 Clause 8.2.3.

10.4 PRODUCT SIZES AND MASS

Available sizes of Linea Weatherboard and Axent Trim and its weight are given in Table 6.

10.5 SIZE AND WEIGHT

Linea Weatherboard is categorised as a Light Weight Wall Cladding as described in NZS 3604. Physical properties of Linea Weatherboard and Axent Trim are provided in Table 6.

Consent Issued BC170037

11 Safe working practices

WARNING — DO NOT BREATHE DUST AND CUT ONLY IN WELL VENTILATED AREA

James Hardie products contain respirable crystalline silica which is considered by some international authorities to be a cause of cancer from some occupational sources. Breathing excessive amounts of respirable silica dust can also cause a disabling and potentially fatal lung disease called silicosis, and has been linked with other diseases. Some studies suggest smoking may increase these risks. During installation or handling: (1) work in outdoor areas with ample ventilation; (2) minimise dust when cutting by using either 'Score and Snap' knife, fibre cement shears or, where not feasible, use a HardieBlade™ Saw Blade and dust-reducing circular saw attached to a HEPA vacuum; (3) warn others in the immediate area to avoid breathing dust; (4) wear a properly-fitted, approved dust mask or respirator (e.g. P1 or P2) in accordance with applicable government regulations and manufacturer instructions to further limit respirable silica exposures. During clean-up, use HEPA vacuums or wet cleanup methods — never dry sweep. For further information, refer to our installation instructions and Safety Data Sheets available at www.jameshardie.co.nz.

FAILURE TO ADHERE TO OUR WARNINGS, SAFETY DATA SHEETS, AND INSTALLATION INSTRUCTIONS MAY LEAD TO SERIOUS PERSONAL INJURY OR DEATH.

James Hardie recommended safe working practices
CUTTING OUTDOORS
1. Position cutting station so wind will blow dust away from the user or others in working area. 2. Use one of the following methods based on the required cutting rate: **BEST** • Dust reducing circular saw equipped with HardieBlade™ Saw Blade and HEPA vacuum extraction. **GOOD** • Dust reducing circular saw with HardieBlade™ Saw Blade.
SANDING/REBATING/DRILLING/OTHER MACHINING
When sanding, rebating, drilling or machining you should always wear a P1 or P2 dust mask and warn others in the immediate area.
IMPORTANT NOTES
1. For maximum protection (lowest respirable dust production), James Hardie recommends always using "Best" — level cutting methods where feasible. 2. NEVER use a power saw indoors. 3. NEVER use a circular saw blade that does not carry the HardieBlade™ logo. 4. NEVER dry sweep — Use wet suppression or HEPA vacuum. 5. NEVER use grinders. 6. ALWAYS follow tool manufacturers' safety recommendations.
P1 or P2 respirators should be used in conjunction with above cutting practices to further reduce dust exposures. Additional exposure information is available at www.jameshardie.co.nz to help you determine the most appropriate cutting method for your job requirements. If concern still exists about exposure levels or you do not comply with the above practices, you should always consult a qualified industrial hygienist or contact James Hardie for further information.

Consent Issued BC170037

Working instructions

Refer to recommended Safe Working Practices before starting any cutting or machining of product.

HardieBlade™ Saw Blade

The HardieBlade™ Saw Blade used with a dust-reducing saw connected to a HEPA vacuum is ideal for fast, clean cutting of James Hardie fibre cement products. A dust-reducing saw uses a dust deflector or a dust collector connected to a vacuum system. When sawing, clamp a straight-edge to the sheet as a guide and run the saw base plate along the straight edge when making the cut.

Hole-forming

For smooth clean cut circular holes:

Mark the centre of the hole on the sheet.

Pre-drill a pilot hole.

Using the pilot hole as a guide, cut the hole to the appropriate diameter with a hole saw fitted to a heavy duty electric drill.

For irregular holes:

Small rectangular or circular holes can be cut by drilling a series of small holes around the perimeter of the hole then tapping out the waste piece from the sheet face.

Tap carefully to avoid damage to sheets, ensuring that the sheet edges are properly supported.

Storage and handling

All James Hardie building products should be stored to avoid damage, with edges and corners of the sheets protected from chipping.

James Hardie building products must be installed in a dry state and be protected from rain during transport and storage. The product must be laid flat under cover on a smooth level surface clear of the ground to avoid exposure to water or moisture, etc.

Quality

James Hardie conducts stringent quality checks to ensure that any product manufactured falls within our quality spectrum. It is the responsibility of the builder to ensure that the product meets aesthetic requirements before installation. James Hardie will not be responsible for rectifying obvious aesthetic surface variations following installation.

12 Product sizes

Table 6

Linea Weatherboard and Axent Trim sizes

						Coverage Information			
Product	Length (mm)	Width (mm)	Thickness (mm)	End Details	Effective Cover (mm)	No. of planks/ metre height (approx.)	Mass kg/lineal m (approx. at EMC)	Mass kg/m² (approx. at EMC)	Weight/ packs (60 units/ pack)
Linea Weatherboard 135	4200*	135	16	T & G	105	9.5	2.62	25.70	660.00
Linea Weatherboard 150	4200*	150	16	T & G	120	8.3	3.1	24.93	781.00
Linea Weatherboard 180	4200*	180	16	T & G	150	6.7	3.57	23.92	899.00
Axent Trim 84mm	2600	84	16	Square	N/A	N/A	1.6	N/A	N/A
Axent Trim 100mm	2600	100	16	Square	N/A	N/A	1.9	N/A	N/A

*Length is 4200mm plus 5mm for the tongue and groove making overall length 4205mm

*The effective thickness of finished Linea Weatherboard on the wall at the lap is approximately 33 to 35mm

13 Accessories

Table 7

Accessories/Tools supplied by James Hardie			
Accessories	**Material number**	**Size (mm)**	**Code**
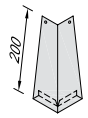	External corner soaker 90º for Linea Weatherboards 180mm • Aluminium • Copper • Stainless Steel	200 long	**301186** **301188** **301197**
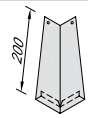	External corner soaker 135º for Linea Weatherboards 180mm • Aluminium	200 long	**301178**
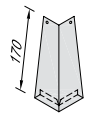	External corner soaker 90º for Linea Weatherboards 150mm • Aluminium • Stainless Steel	170 long	**302820** **302821**
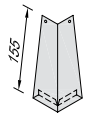	External corner soaker 90º for Linea Weatherboards 135mm • Aluminium • Stainless Steel	155 long	**301185** **301196**
	External Slimline Box Corner Mould	2700 long 4000 long	**301195** **305809**
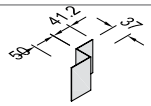	Box Corner 'Z' Flashing	2700 long	**301203**
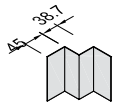	Internal 'W' Mould 90º	2700 long 4000 long	**301184** **305807**
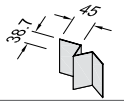	Internal 'W' Mould 135º	2700 long	**301183**
	Vent Strip	3000 long	**302490**
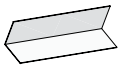	JH Corner Under Flashing 50 x 50mm	3000 long	**303745**
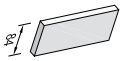	Axent Trim 84mm	84 x 2600 long	**401943**
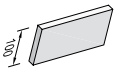	Axent Trim 100mm	100 x 2600 long	**401930**
	HardieFlex™ nail - 5kg	60 x 3.15mm	**302782**
	HardieFlex™ nail - 5kg	60 x 3.15mm	**302784**
	HardieBlade™ Saw Blade	4 tooth - 184mm	**300660**
	HardieBlade™ Saw Blade	6 tooth - 254mm	**303375**
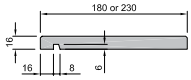	Axent Fascia - 180mm - 230mm	4200 long	**401843** **402230**

Table 8

Accessories not supplied by James Hardie

James Hardie recommends the following products for use in conjunction with its Linea Weatherboard and Axent Trim.
James Hardie does not supply these products. There may also be some other accessories required depending upon the application. Please contact component manufacturer for information on their warranties and further information on their products.

Accessories	Description	Size (MM)	Material/ appearance
	Head flashing Required over window heads to be supplied by window installer. Material must comply with Table 20 and 21 of E2/AS1.	To suit	Etch Primed Aluminium/Powder Coated
	D head or RounDrive Nail Gun nail for concealed fixing Linea Weatherboard	50 x 2.87 60 x 3.15	Hot Dip Galvanised Stainless Steel
	HardieFlex™ Hot Dip Galv. Nails For fixing cavity battens.	40 x 2.8mm	Hot Dip Galvanised
	Jolt Head Nail for face fixing to Linea Weatherboard Hot Dip Galvanised or 316 Stainless Steel	50 x 2.8mm 60 x 3.15mm 75 x 3.15mm 90 x 4.0mm	Self colour
	Joint sealant Paintable flexible sealants are recommended for filling the joints. Refer to Section 7.2 for information.	Tube	Sika, Holdfast
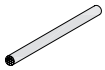	PEF Rod	Polyethylene foam	Sika or similar
	Flexible tape A flexible self-adhesive tape used in preparation of a window. Refer to the Window installation section in this manual for more information. e.g. Tyvek®, Marshall Innovations or similar.	Proprietary tape to adhere to building underlay	Tyvek, Marshall Innovations or similar
	Flashing Material as per Table 20, 'E2/AS1'		Flashing Fabricator
Dimension to suit 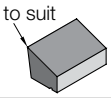	Planted Sill		H3.1 minimum Treated Timber Timber Merchant or cut on site
	Titanium Coated High Speed Drill Bit. For pre-drilling prior to face fixing with jolt head	3.0mm 3.5mm	
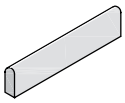	Timber Scriber To scribe beside window site cut to suit	As required	H3.1 minimum Treated Timber Timber Merchant or cut on site
	Fibre Cement Cutting Blade Diamond tip 305mm diameter circular saw blade to fit drop saw	305mm	Diamond Tipped
	Meter Box Refer Electrical Suppliers		
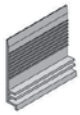	Cant Strip Redway Developments 03 358 5775 Predrill the weatherboards when fixing using Redway Development Cant/Vent Strips	To suit	uPVC
	Inseal 3109 Sealing Strip	5 x 3mm x 25mm	Black Compressible Foam
	CRC Builders Fill Two part exterior grade fill to finish over jolt head nails		

Consent Issued BC170037

14 Details

Various details outlined in the following table are available on Pages 15 to 42.

Table 9

Details

Description	Direct fixed		Timber Cavity Batten Construction	
	Figure	Page	Figure	Page
Foundation detail and soffit detail	Figure 1	15		
Weatherboard fixing	Figure 2	15	Figure 29	27
Boxed corner	Figure 3 & 4	16	Figure 30	28
Mitre corner	Figure 5	17	Figure 31	28
Aluminium box corner	Figure 6	17	Figure 32	28
External corner soaker	Figure 7	18	Figure 33	29
Internal corner	Figure 8	18	Figure 34	29
Internal 90º aluminium 'W' mould corner	Figure 9	19	Figure 35	30
Internal 135º aluminium 'W' mould corner	Figure 10	19	Figure 36	30
Window sill with facings			Figure 38	31
Window sill with sill tray and facings	Figure 11	20		
Window door and head with facings	Figure 12	20	Figure 39	32
Window door and jamb with facings	Figure 13	20	Figure 40	32
Window door and sill without facings	Figure 14	21	Figure 41	32
Window door and head without facings	Figure 15	21	Figure 42	33
Window door and jamb without facings	Figure 16	21	Figure 43	33
Head flashing termination	Figure 17	22	Figure 44	34
One piece apron flashing joint	Figure 18	22	Figure 45	35
Pipe penetration	Figure 19	23	Figure 47	36
Meter box at head	Figure 20	23	Figure 48	37
Meter box at sill	Figure 21	23	Figure 49	37
Meter box at jamb	Figure 22	24	Figure 50	37
Timber cavity fix meter box			Figure 51	38
Deck junction	Figure 23	24	Figure 58	43
Cantilevered timber deck junction	Figure 24	25	Figure 59	43
Sloping soffit to weatherboard junction	Figure 25	25	Figure 57	42
Timber cavity batten fixing			Figure 26	26
Foundation detail			Figure 27	26
Soffit detail			Figure 28	27
Batten layout at window opening			Figure 37	31
One piece gutter/wall junction			Figure 46	36
Drainage joint			Figure 52	39
Enclosed deck balustrade to wall			Figure 53	40
Enclosed balustrade to wall			Figure 54	40
Enclosed deck	Figure 55	41	Figure 55	41
Parapet flashing			Figure 56	42
Timber deck junction			Figure 60	44
Door sill support detail			Figure 61	44
Junction between Linea® Weatherboard and fascia board			Figure 62	45
Exclosed roof to wall intersection			Figure 63	46

Consent Issued BC170037

Product Warranty

Linea®
WEATHERBOARD

March 2015

Warranty: James Hardie New Zealand ("James Hardie") warrants for a period of 25 years from the date of purchase that the Linea® Weatherboard (the "Product"), will be free from defects due to defective factory workmanship or materials and, subject to compliance with the conditions below, will be resistant to cracking, rotting, fire and damage from termite attacks to the extent set out in James Hardie's relevant published literature current at the time of installation. James Hardie warrants for a period of 15 years from the date of purchase that the Axent™ Trim and accessories supplied by James Hardie will be free from defects due to defective factory workmanship or materials.

Nothing in this document shall exclude or modify any legal rights a customer may have under the Consumer Guarantees Act or otherwise which cannot be excluded or modified at law.

CONDITIONS OF WARRANTY:

The warranty is strictly subject to the following conditions:

a) James Hardie will not be liable for breach of warranty unless the claimant provides proof of purchase and makes a written claim either within 30 days after the defect would have become reasonably apparent or, if the defect was reasonably apparent prior to installation, then the claim must be made prior to installation.

b) This warranty is not transferable.

c) The Product must be installed and maintained strictly in accordance with the relevant James Hardie literature current at the time of installation and must be installed in conjunction with the components or products specified in the literature. Further, all other products, including coating and jointing systems, applied to or used in conjunction with the Product must be applied or installed and maintained strictly in accordance with the relevant manufacturer's instructions and good trade practice.

d) The project must be designed and constructed in strict compliance with all relevant provisions of the current New Zealand Building Code ("NZBC"), regulations and standards.

e) The claimant's sole remedy for breach of warranty is (at James Hardie's option) that James Hardie will either supply replacement product, rectify the affected product or pay for the cost of the replacement or rectification of the affected product.

f) James Hardie will not be liable for any losses or damages (whether direct or indirect) including property damage or personal injury, consequential loss, economic loss or loss of profits, arising in contract or negligence or howsoever arising. Without limiting the foregoing James Hardie will not be liable for any claims, damages or defects arising from or in any way attributable to poor workmanship, poor design or detailing, settlement or structural movement and/or movement of materials to which the Product is attached, incorrect design of the structure, acts of God including but not limited to earthquakes, cyclones, floods or other severe weather conditions or unusual climatic conditions, efflorescence or performance of paint/coatings applied to the Product, normal wear and tear, growth of mould, mildew, fungi, bacteria, or any organism on any Product surface or Product (whether on the exposed or unexposed surfaces).

g) All warranties, conditions, liabilities and obligations other than those specified in this warranty are excluded to the fullest extent allowed by law.

h) If meeting a claim under this warranty involves re-coating of Products, there may be slight colour differences between the original and replacement Products due to the effects of weathering and variations in materials over time.

Disclaimer: The recommendations in James Hardie's literature are based on good building practice, but are not an exhaustive statement of all relevant information and are subject to conditions (c), (d), (f) and (g) above. James Hardie has tested the performance of Linea® Weatherboard when installed in accordance with the Linea® Weatherboard technical specification, in accordance with the standards and verification methods required by the NZBC and those test results demonstrate the product complies with the performance criteria established by the NZBC. However, as the successful performance of the relevant system depends on numerous factors outside the control of James Hardie (e.g. quality of workmanship and design) James Hardie shall not be liable for the recommendations made in its literature and the performance of the relevant system, including its suitability for any purpose or ability to satisfy the relevant provisions of the NZBC, regulations and standards, as it is the responsibility of the building designer to ensure that the details and recommendations provided in the relevant James Hardie installation manual are suitable for the intended project and that specific design is conducted where appropriate.

Copyright March 2015. © James Hardie New Zealand. TM and ® denotes a Trademark or Registered Mark owned by James Hardie Technology Limited.

Ask James Hardie™
Call 0800 808 868
www.jameshardie.co.nz

WAIMAKARIRI DISTRICT COUNCIL
Plans and specifications APPROVED in accordance with the Building Act 2004, clause 49 and the Building Regulations 1992, Clause 3
170037 13/03/2017 petert

James Hardie®
a smarter way™